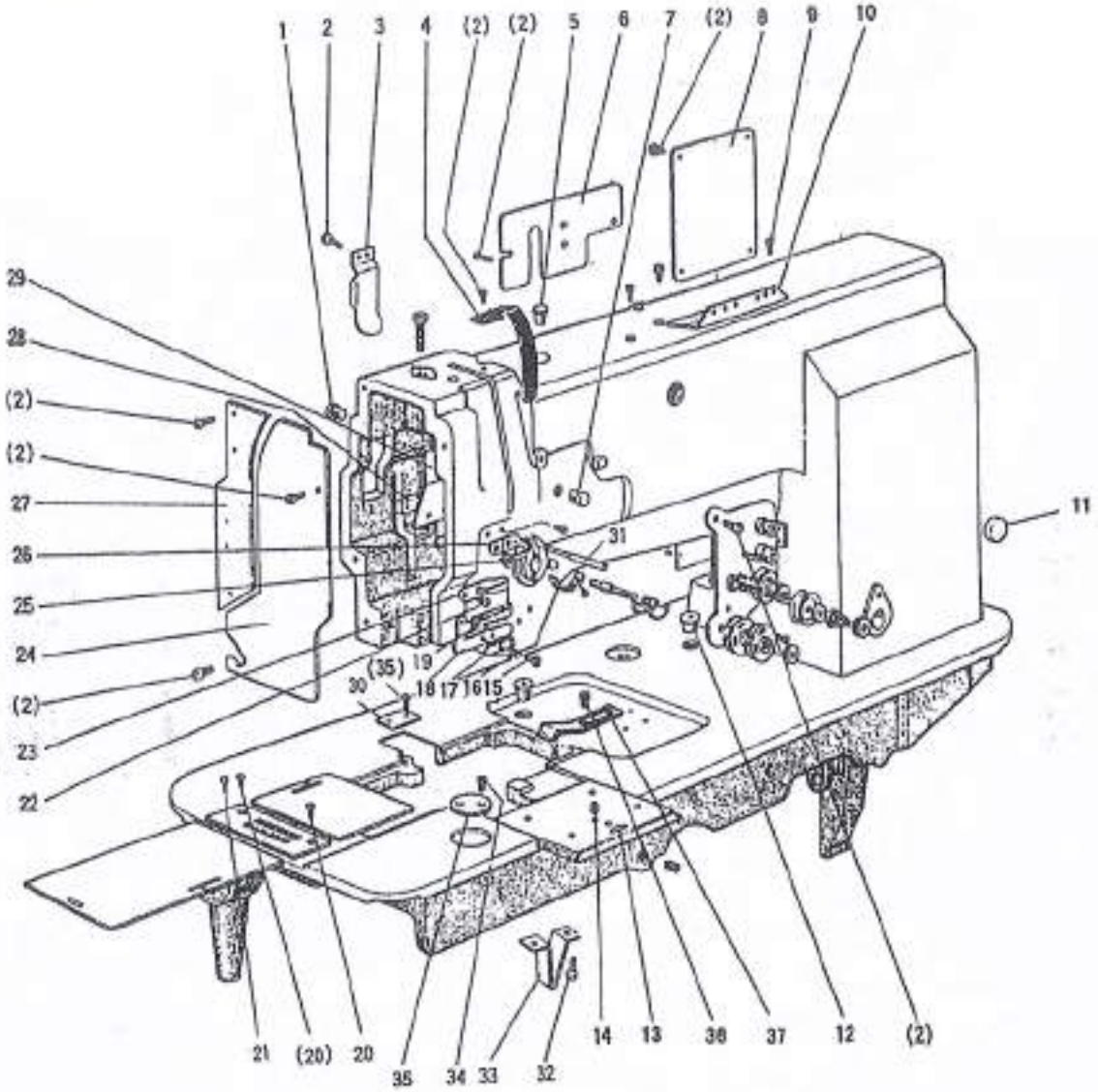
1
2
3
4
(2)
(2)
5
6
7
(2)
8
9
10
29
28
(2)
(2)
27
26
25
24
(2)
23
22
11
31
(35)
19
30
18
17
16
15
21
(20)
20
35
34
33
32
14
13
36
37
12
(2)

A.ARM BED AND ITS ACCESSORIES

Fig. No.	Part No.	Name	WF925	WF926	WF925/AUT	WF926/AUT	Description
A01	HA300B2090	Rubber plug	2	2	2	2	
A02	HA300B2170	Screw	15	15	15	15	SM11/64 (40) ×8
A03	H4716B8001	Oil guard plate	1	1	1	1	
A04	H4717B8001	Thread take-up cover	1	1	1	1	
A05	H4715B8001	Rubber plug	1	1	1	1	Φ13
A06	H4718B8001	Side cover (left)	1	1	1	1	
A07	H2000B2010	Rubber plug	1	1	1	1	Φ13
A08	H4919B8001	Side cover (right)			1	1	
A08	H4719B8001	Side cover (right)	1	1			
A09	HA700B2060	Screw	2	2	2	2	SM11/64 (40) ×8
A10	H2400B2100	Thread guide	1	1	1	1	
A11	HA307B0673	Rubber plug	1	1	1	1	
A12	H2000M0080	Cap	2	2	2	2	
A13	H3219B0067	Slide plate complete		1		1	
A14	H3200B2170	Screw		1		1	SM13/64 (32) ×4.8
A15	H4722B8001	Screw	1	1	1	1	SM1/8 (44) ×3
A16	H4723B8001	Spring	1	1	1	1	
A17	H4724B8001	Plate	1	1	1	1	
A18	H4725B8001	Thread guide	1	1	1	1	
A19	H3200B2100	Screw	1	1	1	1	SM9/64 (40) ×6.5
A20	HA300B2190	Screw	2	1	2	1	SM11/64 (40) ×8
A21	H3200B2120	Screw		1		1	SM9/64 (36) ×6.5
A22	H3000D2160	Screw	1	1	1	1	SM9/64 (40) ×6.5
A23	H4726B8001	Thread guide (middle)	1	1	1	1	
A24	H4727B8001	Face plate	1	1	1	1	
A25	H2400B2080	Screw	2	2	2	2	SM3/16 (28) ×11
A26	H2400B2070	Thread guide (upper)	1	1	1	1	
A27	H4730B8001	Guide mounting plate	1	1	1	1	
A28	H2400B2060	Plate for oil guard	1	1	1	1	
A29	H3200B2060	Oil guard	1	1	1	1	
A30	H4911B8001	Cover				1	
A30	H5015B8001	Cover			1		
A31	H4916B8001	Tension releasing pin			1	1	
A31	H4769E8001	Tension releasing pin	1	1			
A32	H4912B8001	Screw			2	2	SM1/4 (24) ×9
A33	H4913B8001	Supporter			1	1	
A34	H4914B8001	Screw			2	4	SM9/64 (40) ×6
A35	H4915B8001	Cover				1	
A36	H4742E8001	Screw	2		2		SM11/64 (40) ×6
A37	H4751B8001	Tension releasing plate	1		1		

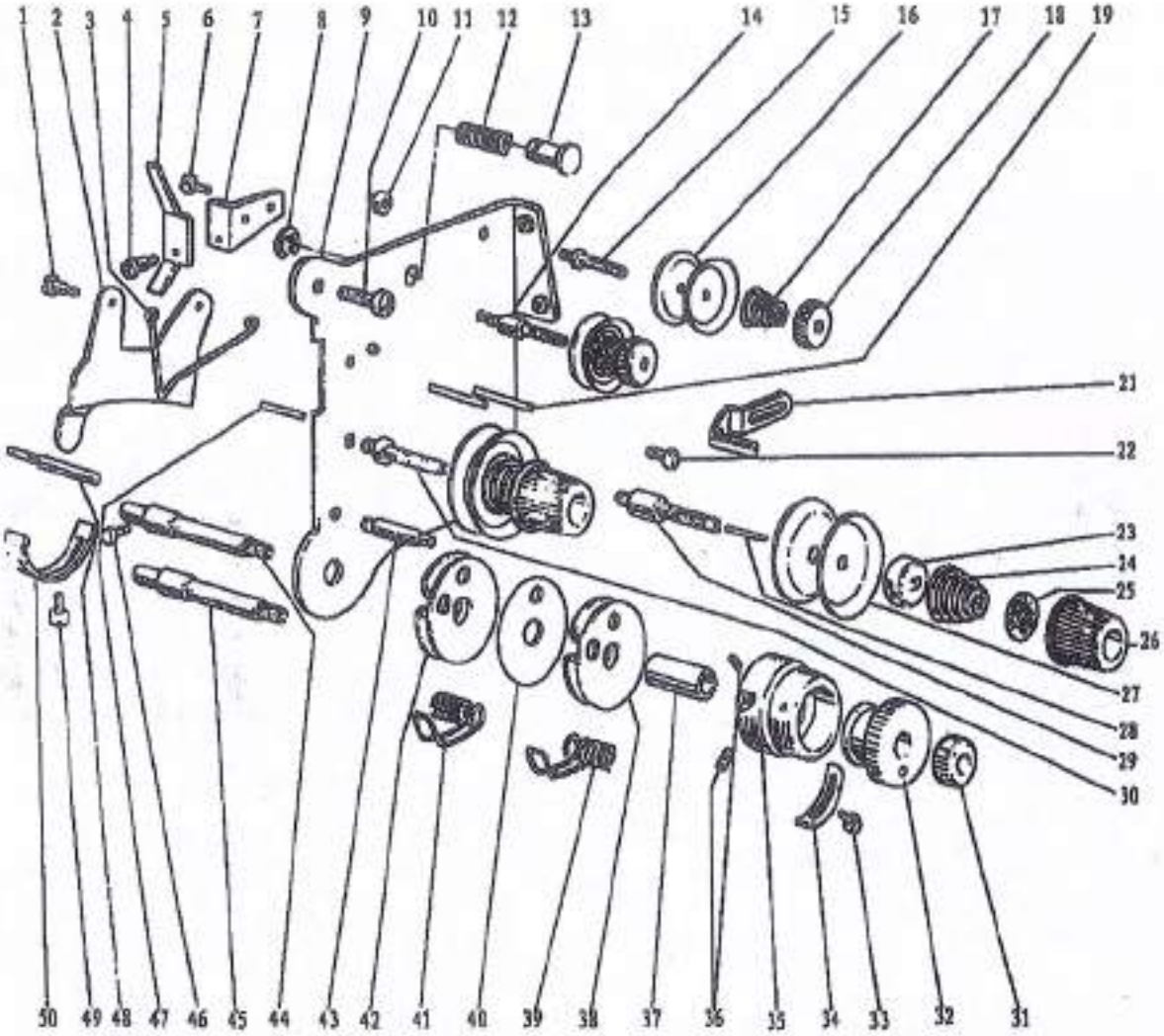
1
2
3
4
5
6
7
8
9
10
11
12
13
14
15
16
17
18
19
21
22
23
24
25
26
27
28
29
30
50
49
48
47
46
45
44
43
42
41
40
39
38
37
36
35
34
33
32
31

B.THREAD TENSION REGULATOR MECHANISM

Fig. No.	Part No.	Name	WF925	WF926	WF925/AUT	WF926/AUT	Description
B01	H3221B6811	Screw	2	2	2	2	SM9/64 (40) ×3
B02	H3221B3142	Tension releasing plate	1	1	1	1	
B03	H3221B6812	Tension releasing spring	1	1	1	1	
B04	H4705C8001	Screw	1	1	1	1	SM9/64 (40) ×4.2
B05	H4706C8001	Lever	1	1	1	1	
B06	HA7311C306	Screw	1	1	1	1	SM9/64 (40) ×4.5
B07	H4707C8001	Mounting plate	1	1	1	1	
B08	H007013050	Stop ring	1	1	1	1	GB/T896 5
B09	H3221B6820	Mounting plate	1	1	1	1	
B10	HA300C2030	Screw	2	2	2	2	
B11	H3221B6810	Nut	1	1	1	1	SM11/64 (40)
B12	H4708C8001	Spring	1	1	1	1	
B13	H4709C8001	Push button	1	1	1	1	
B14	H3221B0685	Thread tension stud		1		1	
B15	H3221B0683	Thread tension stud	1	1	1	1	
B16	HA112B0693	Thread tension disk	2	4	2	4	
B17	H3221B0684	Thread tension spring	1	2	1	2	
B18	HA710B0671	Thumb nut	1	2	1	2	
B19	H3221B0682	Pin	2	3	2	3	
B21	H3306B0661	Thread guide	1	1	1	1	
B22	HA106B0676	Screw	1	1	1	1	SM9/64 (40) ×6
B23	HA310B0702	Thread tension releasing plate	1	2	1	2	
B24	H4710C8001	Thread tension spring	1	2	1	2	
B25	HA115B7010	Thumb nut revolution stopper	1	2	1	2	
B26	HA310B0701	Thumb nut complete	1	2	1	2	
B27	HA310B0705	Thread tension disk	2	4	2	4	
B28	H3221B6816	Pin		1		1	
B29	H3221B0689	Thread tension stud		1		1	
B30	H3221B0686	Thread tension stud	1	1	1	1	
B31	H32481B721	Thumb nut	1	1	1	1	SM1/4 (40)
B32	H32481B621	Take-up spring guide		1		1	
B33	H32481BC21	Screw		1		1	SM9/64 (40) ×6
B34	H32481BB21	Stopper		1		1	
B35	H32481B921	Thread tension post		1		1	
B36	H32481B521	Screw		2		2	SM1/8 (44) ×3.9
B37	H32481B821	Bushing		1		1	
B38	H32481BF21	Plate complete		1		1	
B39	H4712C8001	Thread take-up spring		1		1	
B40	H32481BE21	Plate		1		1	
B41	H4713C8001	Thread take-up spring	1	1	1	1	
B42	H32481BD21	Plate complete	1	1	1	1	
B43	H4804C8001	Screw	1		1		
B43	H32481B421	Thread tension stud		1		1	SM9/64 (40) ×2.9

B.THREAD TENSION REGULATOR MECHANISM

Fig. No.	Part No.	Name	WF925	WF926	WF925/AUT	WF926/AUT	Description
B44	H3248IB121	Thread tension stud		1		1	
B45	H4805C8001	Thread tension stud	1		1		
B46	H3230K0751	Screw	1	1	1	1	SM11/64（40）×10
B47	H3221B6817	Pin	1	1	1	1	
B48	H3221B6818	Tension releasing pin	1	1			
B48	H4916B8001	Tension releasing pin			1	1	
B49	H3200B2100	Screw	1	1	1	1	SM9/64（40）×6.5
B50	H3221B6819	Stopper	1	1	1	1	

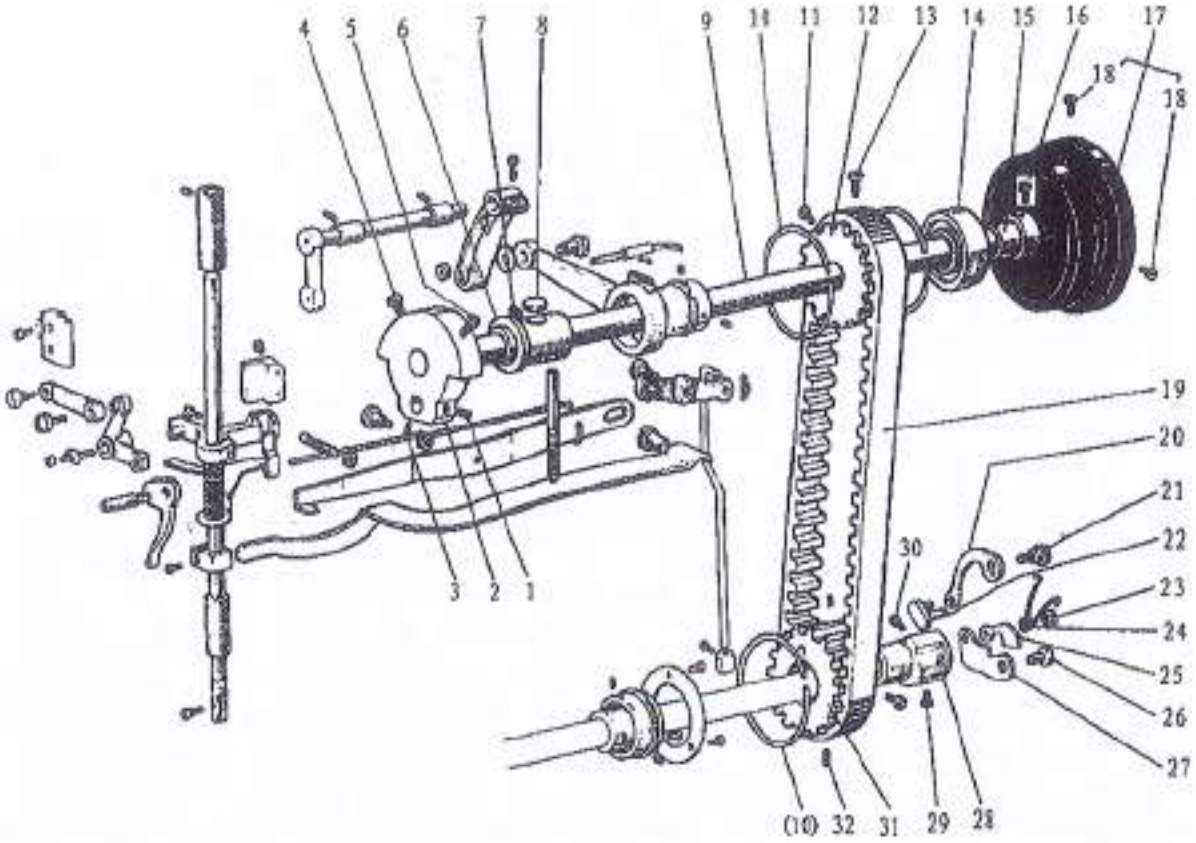
4
5
6
7
8
9
14
11
12
13
14
15
16
17
18
18
19
20
21
22
23
24
25
26
27
30
3
2
1
(10)
32
31
29
28

C.ARM SHAFT MECHANISM

Fig. No.	Part No.	Name	WF925	WF926	WF925/AUT	WF926/AUT	Description
C01	HA307C0662	Set screw	1	1	1	1	SM1/4 (40) ×7
C02	H4706D8001	Crank	1	1	1	1	
C03	HA105D0662	Screw	1	1	1	1	SM1/4 (40) ×3.5
C04	HA100C2060	Set screw	1	1	1	1	SM9/32 (28) ×14
C05	HA100C2070	Screw	1	1	1	1	SM9/32 (28) ×13
C06	H32111B204	Arm shaft bushing (left)	1	1	1	1	
C07	H4708D8001	Screw	1	1	1	1	SM1/4 (24) ×13
C08	H32111B104	Felt	1	1	1	1	
C09	H4709D8001	Arm shaft	1	1	1	1	
C10	H3205C0661	Spring flange	3	3	3	3	
C11	HA113F0684	Screw	1	1	1	1	SM15/64 (28) ×8.5
C12	H3205C1021	Belt pulley (upper)	1	1	1	1	
C13	HA100F2130	Screw	1	1	1	1	SM15/64 (28) ×14.5
C14	H3205J0662	Bearing	1	1			
C15	H3205J0661	Collar	1	1			
C16	HA113F0684	Screw	2	2			SM15/64 (28) ×8.5
C17	H4711D8001	Pulley	1	1			
C18	HA110D0672	Screw	2	2			SM11/64 (28) ×12
C19	H3200C2030	Cog belt	1	1	1	1	
C20	H4713D8001	Spring plate	1	1	1	1	
C21	H4714D8001	Pin	1	1	1	1	
C22	H4715D8001	Link	1	1	1	1	
C23	H007013025	E-type stop ring	1	1	1	1	GB/T896 2.5
C24	H4716D8001	Twist spring	1	1	1	1	
C25	H4717D8001	Plate	1	1	1	1	
C26	H4718D8001	Pin	1	1	1	1	
C27	H4719D8001	Plate	1	1	1	1	
C28	H4720D8001	Bushing	1	1	1	1	
C29	H4721D8001	Screw	1	1	1	1	SM15/64(28)×10.5
C30	HA104F0654	Screw	1	1	1	1	SM15/64 (28) ×10
C31	H4722D8001	Belt pulley (lower)	1	1	1	1	
C32	H4723D8001	Screw	2	2	2	2	SM15/64 (28) ×4.5

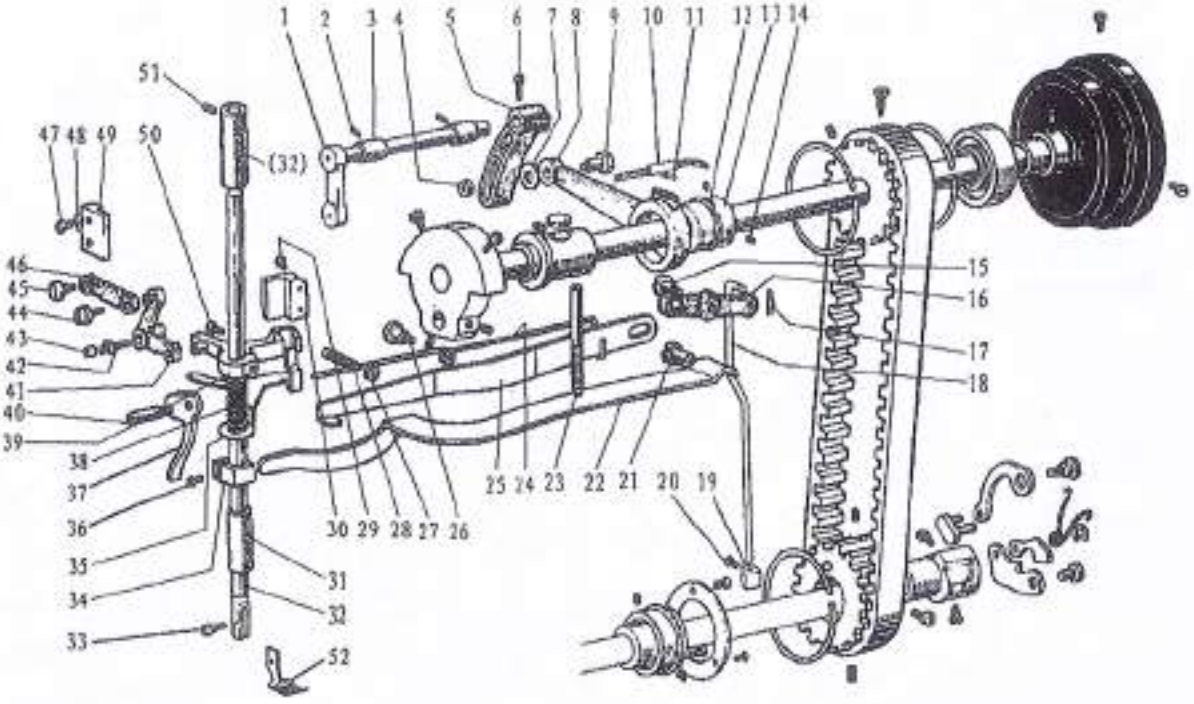
1
2
3
4
5
6
7
8
9
10
11
12
13
14
51
47
48
49
50
(32)
46
45
44
43
42
41
40
39
38
37
36
35
34
33
52
31
32
30
29
28
27
26
25
24
23
22
21
20
19
15
16
17
18

D.UPPER SHAFT & PRESSER FOOT MECHANISM

Fig. No.	Part No.	Name	WF925	WF926	WF925/AUT	WF926/AUT	Description
D01	H4705E8001	Feed lifting rock shaft	1	1	1	1	
D02	H4706E8001	Screw	2	2	2	2	SM1/4 (24) ×7
D03	H4707E8001	Bushing	2	2	2	2	
D04	HS91165206	Nut	1	1	1	1	M6×0.75
D05	H4709E8001	Lever	1	1	1	1	
D06	H3115F0671	Screw	1	1	1	1	SM1/4 (28) ×16
D07	H2013J0065	Washer	1	1	1	1	
D08	H2014J0066	Connecting rod	1	1	1	1	
D09	H2000J2100	Bolt	1	1	1	1	
D10	H4713E8001	Oil pipe & wick complete	1	1	1	1	
D11	H20111C106	Spring	1	1	1	1	
D12	H007009250	C-type stop ring	1	1	1	1	GB/T894.1 25
D13	H4714E8001	Eccentric	1	1	1	1	
D14	HA307C0662	Screw	2	2	2	2	SM1/4 (40) ×6
D15	H4732E8001	Screw	1	1	1	1	SM1/4 (24) ×14
D16	H4735E8001	Knee lifter lifting lever complete	1	1	1	1	
D17	H4739E8001	Snap pin	1	1	1	1	
D18	H4738E8001	Operation rod	1	1	1	1	
D19	H4741E8001	Collar	1	1	1	1	
D20	H4742E8001	Screw	1	1	1	1	SM11/64 (40) ×5.5
D21	H3100G2170	Screw	1	1	1	1	SM1/4 (24) ×17
D22	H4730E8001	Lever spring	1	1	1	1	
D23	H4729E8001	Screw	1	1	1	1	SM15/64 (28) ×79
D24	H4727E8001	Twist spring	1	1	1	1	
D25	H4728E8001	Knee lifting lever	1	1	1	1	
D26	H3100G2130	Screw	1	1	1	1	SM1/4 (24) ×7
D27	H4726E8001	Nut	1	1	1	1	
D28	H4725E8001	Screw	1	1	1	1	SM1/4 (24) ×19
D29	HA111G0683	Screw	2	2	2	2	SM11/64(40)×12
D30	H4723E8001	Guide	1	1	1	1	
D31	H4744E8001	Bushing	1	1	1	1	
D32	H4754E8001	Presser bar	1	1	1	1	
D33	H3200E2020	Screw	1	1	1	1	SM1/8(44)×9
D34	H4746E8001	Spring bracket	1	1	1	1	
D35	H4768E8001	Thread releasing plate	1	1			
D36	H2404I0034	Screw	1	1	1	1	SM9/64 (40) ×8.5
D37	H4748E8001	Lifter lever	1	1	1	1	
D38	H4767E8001	Spring	1	1			
D39	H4752E8001	Bracket	1	1	1	1	
D40	H4749E8001	Screw	1	1	1	1	SM11/64 (40) ×8.5
D41	H4715E8001	Bell crank	1	1	1	1	
D42	H2004J0655	Support shaft	1	1	1	1	
D43	H4717E8001	Roller	1	1	1	1	

D.UPPER SHAFT & PRESSER FOOT MECHANISM

Fig. No.	Part No.	Name	WF925	WF926	WF925/AUT	WF926/AUT	Description
D44	H4718E8001	Screw	1	1	1	1	SM11/64(32)×6
D45	H2004J0662	Screw	1	1	1	1	SM1/4(40)×5
D46	H4719E8001	Link	1	1	1	1	
D47	HA100E2150	Screw	2	2	2	2	SM11/64（40）×10
D48	H4722E8001	Washer	2	2	2	2	
D49	H4721E8001	Bell crank guide	1	1	1	1	
D50	H4753E8001	Screw	1	1	1	1	SM11/64（40）×14.5
D51	H4708D8001	Screw	2	2	2	2	SM1/4(24)×13
D52	H4757E8001	Lifting presser foot		1		1	
D52	H3100G2110	Lifting presser foot	1		1		

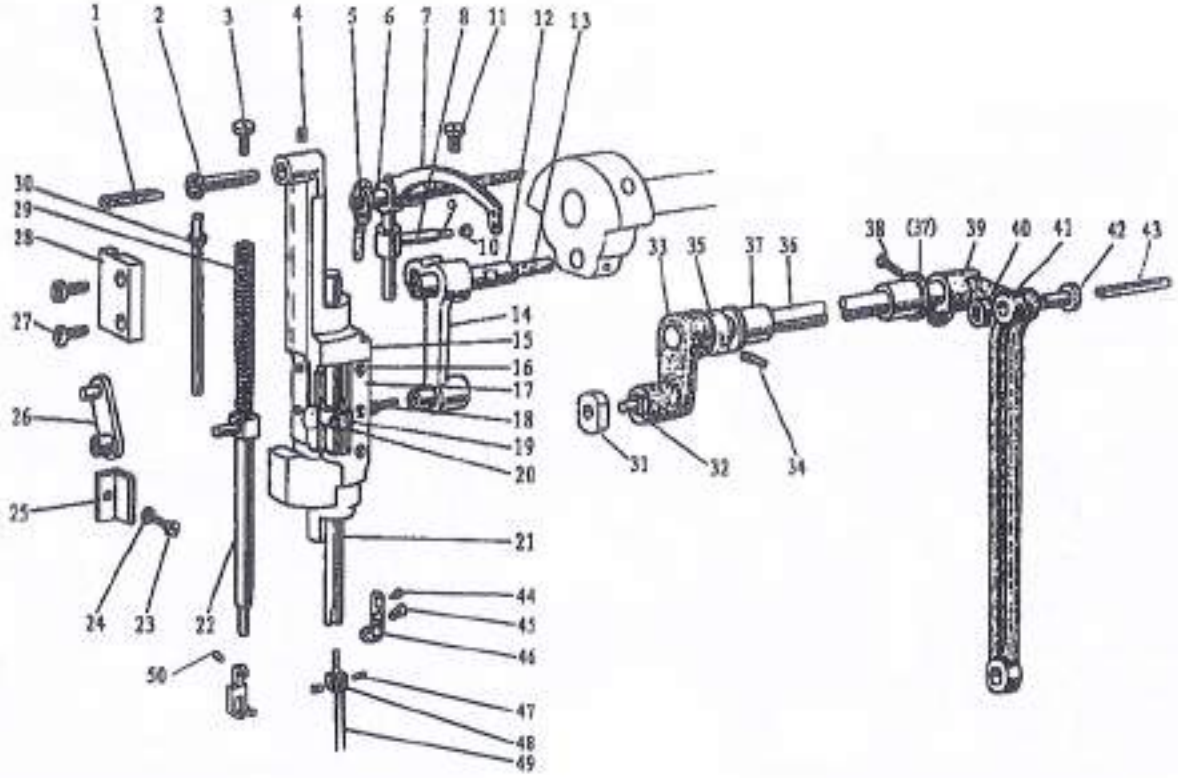
1
2
3
4
5
6
7
8
11
12
13
30
29
28
27
26
25
24
23
22
50
10
14
15
16
17
18
19
20
21
44
45
46
47
48
49
33
35
37
36
31
32
34
38
(37)
39
40
41
42
43

E.NEEDLE BAR & THREAD TAKE-UP LEVER MECHANISM

Fig. No.	Part No.	Name	WF925	WF926	WF925/AUT	WF926/AUT	Description
E01	H24211DN05	Oil wick	1	1	1	1	
E02	H4706F8001	Needle bar guide bracket stud	1	1	1	1	
E03	H4707F8001	Screw	1	1	1	1	SM5/16（28）×10.4
E04	HA100C2020	Screw	1	1	1	1	SM15/64（28）×10
E05	H24211DN05	Oil wick	1	1	1	1	
E06	H24211DM05	Thread take-up lever support stud	1	1	1	1	
E07	H4712F8001	Thread take-up lever	1	1	1	1	
E08	H2405D1112	Thread take-up slide brock	1	1	1	1	
E09	H24211D405	Oil wick	1	1	1	1	
E10	H24211D305	Plug	1	1	1	1	
E11	HA110D0672	Screw	1	1	1	1	SM15/64（28）×12
E12	H2405D0662	Needle bar crank pin	1	1	1	1	
E13	H4716F8001	Oil wick	1	1	1	1	
E14	H4717F8001	Connecting link	1	1	1	1	
E15	H4719F8001	Needle bar guide bracket	1	1	1	1	
E16	H32111D304	Screw	6	6	6	6	SM3/32（56）×4
E17	H4721F8001	Spacer	2	2	2	2	
E18	H3204D6513	Felt	1	1	1	1	
E19	H4722F8001	Needle bar holder	1	1	1	1	
E20	H32111D604	Screw	1	1	1	1	SM9/64（40）×8.5
E21	H4724F8001	Needle bar		1		1	
E21	H4806F8001	Needle bar	1		1		
E22	H4725F8001	Vibrating presser bar	1	1	1	1	
E23	H3400C2020	Screw	1	1	1	1	
E24	H32001I2030	Washer	1	1	1	1	
E25	H3400C2010	Needle bar guide	1	1	1	1	
E26	H4726F8001	Vibrating presser bar link	1	1	1	1	
E27	H4753E8001	Screw	2	2	2	2	SM11/64（40）×17.5
E28	H4728F8001	Vibrating presser bar guide	1	1	1	1	
E29	H4729F8001	Spring	1	1	1	1	
E30	H4730F8001	Vibrating presser spring guide	1	1	1	1	
E31	H3410C301P	Square block	1	1	1	1	
E32	H3406C0671	Crank pin	1	1	1	1	SM15/64(28)×10
E33	H3406C0672	Needle bar vibrating crank (left)	1	1	1	1	
E34	H602040240	Taper	1	1	1	1	GB/T117 4×24
E35	H4734F8001	Collar	1	1	1	1	
E36	H4736F8001	Needle bar vibrating shaft	1	1	1	1	
E37	H3204B0652	Needle bar vibrating shaft bushing	2	2	2	2	
E38	H2012N0652	Screw	1	1	1	1	SM1/4（24）×16
E39	H3407C0661	Needle bar vibrating crank (right)	1	1	1	1	
E40	H32311D506	Nut	1	1	1	1	
E41	H3407C0662	Connecting link	1	1	1	1	
E42	H32311D306	Screw	1	1	1	1	SM5/16(24)

E.NEEDLE BAR & THREAD TAKE-UP LEVER MECHANISM

Fig. No.	Part No.	Name	WF925	WF926	WF925/AUT	WF926/AUT	Description
E43	H32311D406	Oil wick	1	1	1	1	
E44	H3129F0691	Screw	1		1		SM3/32 (56) ×2.5
E45	HA100C2170	Screw	1		1		SM1/8 (44) ×4.5
E46	H3129F0693	Thread guide	1		1		
E47	H32132D104	Screw		2		2	SM9/64 (40) ×3
E48	H4739F8001	Needle clamp(1/4)		1		1	
E49	H4740F8001	Needle	1	2	1	2	
E50	HA700F2100	Screw	1	1	1	1	SM11/64 (40) ×7

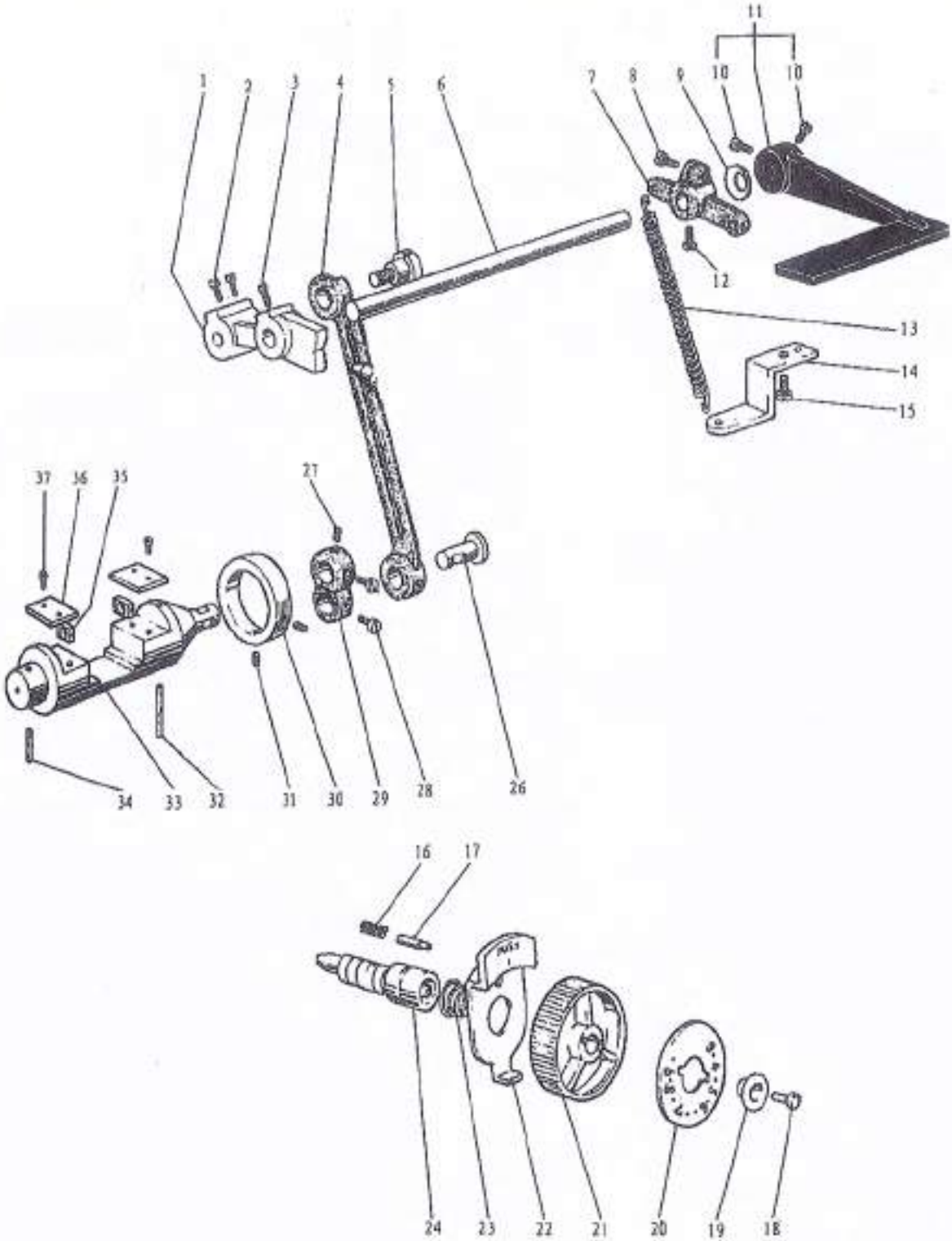
1
2
3
4
5
6
7
8
9
10
11
10
12
13
14
15
37
36
35
27
34
33
32
31
30
29
28
26
16
17
24
23
22
21
20
19
18

F.STITCH REGULATOR MECHANISM

Fig. No.	Part No.	Name	WF925	WF926	WF925/AUT	WF926/AUT	Description
F01	H4706G8001	Feed regulator cam	1	1	1	1	
F02	HA113F0684	Screw	2	2	2	2	SM15/64（28）×8.5
F03	H3200F2020	Screw	1	1	1	1	SM15/64（28）×12
F04	H4707G8001	Link	1	1	1	1	
F05	HA100G2070	Eccentric shaft	1	1	1	1	
F06	H4709G8001	Reverse stitch shaft (upper)	1	1			
F06	H4909G8001	Reverse stitch shaft (upper)			1	1	
F07	H3207F0671	Arm	1	1			
F07	H4905G8001	Arm			1	1	
F08	HA800F2020	Screw	1	1	1	1	
F09	HA100F2110	Spring Washer	1	1			
F10	HA113F0684	Screw	2	2			
F11	H4711G8001	Reverse sewing lever	1	1			
F11	H4906G8001	Reverse sewing lever			1	1	
F12	H3207F0672	Screw	1	1	1	1	SM11/64（40）×8.5
F13	H4710G8001	Spring	1	1	1	1	
F14	H3200F2050	Guide plate	1	1			
F15	HA300C2030	Screw	1	1			SM11/64（40）×8
F16	H3200F2110	Spring	1	1	1	1	
F17	HA700F2030	Pin	1	1	1	1	
F18	HA720F0686	Screw	1	1	1	1	SM3/16(28)×18
F19	HA720F0685	Bushing	1	1	1	1	
F20	H4910G8001	Stitch length indicating plate	1	1	1	1	
F21	HA7421F120	Dial	1	1	1	1	
F22	HA720F0683	Stopper pin releasing lever	1	1	1	1	
F23	HA720F0687	Coil spring	1	1	1	1	
F24	HA109F0671	Screw bar	1	1	1	1	
F26	H3206F0662	Pin	1	1	1	1	
F27	H415050200	Screw	1	1	1	1	GB/T70.1 M5×20
F28	H428050060	Screw	2	2	2	2	GB/T77 M5×6
F29	H4714G8001	Reverse sewing crank	1	1	1	1	
F30	H4715G7101	Collar	1	1	1	1	
F31	HA3411D308	Screw	2	2	2	2	SM15/64"(28)×7
F32	H4719G8001	Felt	1	1	1	1	
F33	H4720G8001	Rverse block	1	1	1	1	
F34	H4721G8001	Felt	1	1	1	1	
F35	H4722G8001	Square block	2	2	2	2	
F36	H4723G8001	Guide plate	2	2	2	2	
F37	HA300C2030	Screw	4	4	4	4	SM11/64（40）×8

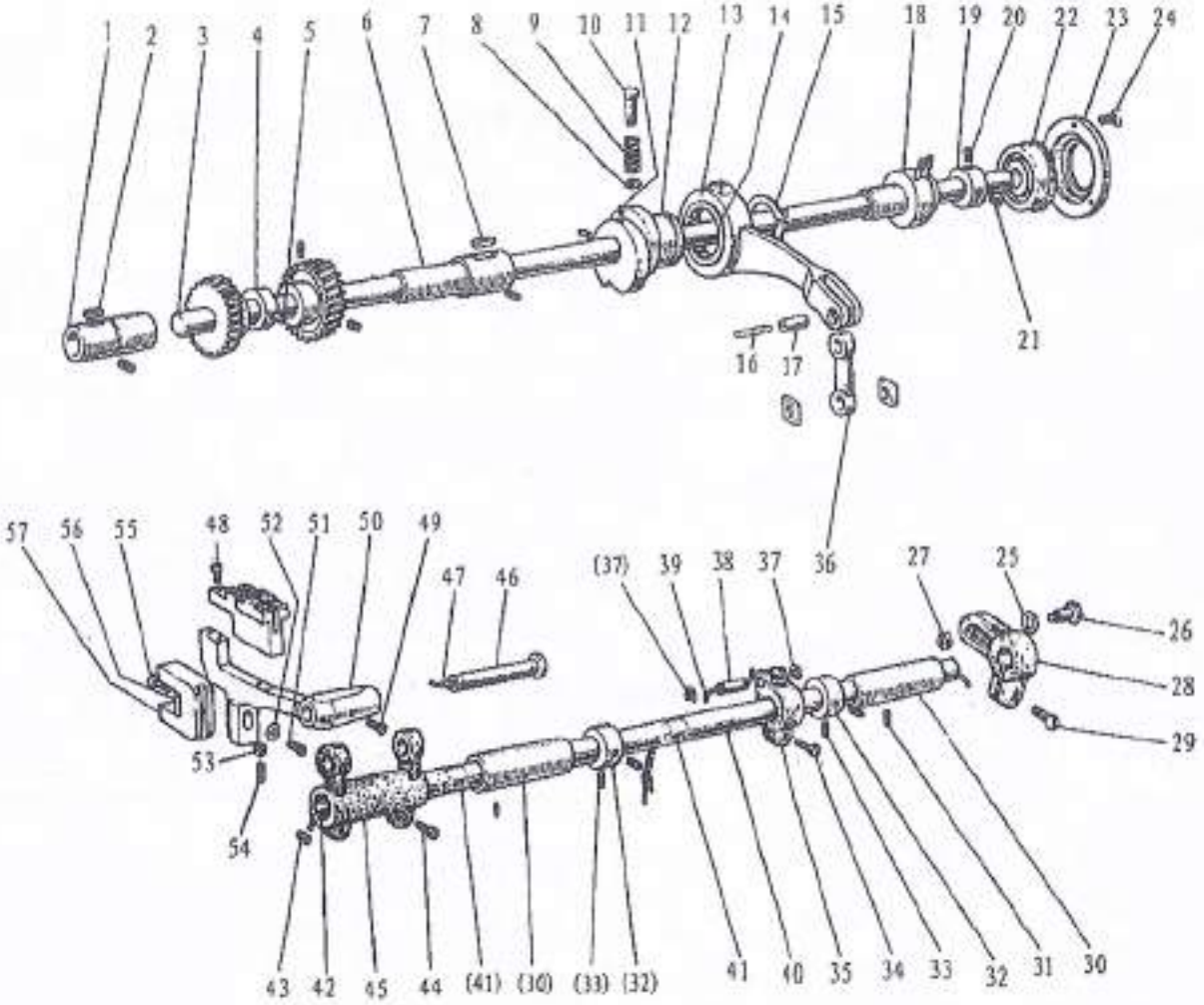
1
2
3
4
5
6
7
8
9
10
11
12
13
14
15
18
19
20
22
23
24
21
16
17
36
57
56
55
48
52
51
50
49
47
46
(37)
39
38
37
27
25
26
28
29
53
54
43
42
45
44
(41)
(30)
(33)
(32)
41
40
35
34
33
32
31
30

G.LOWER SHAFT & FEED ROCK SHAFT MECHANISM

Fig. No.	Part No.	Name	WF925	WF926	WF925/AUT	WF926/AUT	Description
G01	H4706H8001	Lower shaft bushing (left)	1	1	1	1	
G02	H4707H8001	Oil wick	1	1	1	1	
G03	H4708H8001	Lower shaft	1	1	1	1	
G04	H4710H8001	Feed eccentric cam	1	1	1	1	
G05	H3205H0654	Screw	1	1	1	1	SM1/4(40)×5
G06	H4712H8001	Lower shaft bushing (right)	1	1	1	1	
G07	H4713H8001	Oil wick	1	1	1	1	
G08	H007013050	Stop ring	2	2	2	2	GB/T896 5
G09	H4714H8001	Spring	1	1	1	1	
G10	H4715H8001	Push button	1	1	1	1	
G11	H2405D0664	Screw	2	2	2	2	SM15/64(28)×14
G12	H4717H8001	Feed eccentric	1	1	1	1	
G13	H4718H8001	Feed connecting rod	1	1	1	1	
G14	H4719H8001	Needle bearing	1	1	1	1	
G15	H007009260	C-type stop ring	1	1	1	1	GB/T894.1 26
G16	H4720H8001	Oil wick	1	1	1	1	
G17	H4721H8001	Shaft	1	1	1	1	
G18	H4722H7101	Lower shaft bushing complete (middle)	1	1	1	1	
G19	H4725H8001	Bushing	1	1	1	1	
G20	HA105D0662	Screw	1	1	1	1	SM1/4（40）×4
G21	H3205H0654	Screw	1	1	1	1	SM1/4(40)×5
G22	H4723H8001	Ball bearing	1	1	1	1	
G23	H4727H8001	Bearing holder	1	1	1	1	
G24	HA7311C306	Screw	3	3	3	3	SM9/64（40）×7
G25	H4728H8001	Washer	1	1	1	1	
G26	H4729H8001	Screw	1	1	1	1	M6
G27	H003055060	Nut	1	1	1	1	GB52008 M6
G28	H4731H8001	Feed connection crank (right)	1	1	1	1	
G29	H2012N0652	Screw	1	1	1	1	SM1/4(24)×16
G30	HA100G2120	Feed rock shaft bushing	2	2	2	2	
G31	H4708D8001	Screw	2	2	2	2	SM1/4(24)×13
G32	HA108G0661	Collar	2	2	2	2	
G33	HA105D0662	Screw	4	4	4	4	1/4(40)×4
G34	H2012N0652	Screw	1	1	1	1	SM1/4(24)×16
G35	H4736H8001	Feed connection crank (middle)	1	1	1	1	
G36	H4737H8001	Link	1	1	1	1	
G37	H007013050	E-type stop ring	2	2	2	2	GB/T896 5
G38	H4738H8001	Pin	1	1	1	1	
G39	H4739H8001	Oil wick	1	1	1	1	
G40	H3204G0651	Feed rock shaft	1	1	1	1	
G41	H4740H8001	Felt	2	2	2	2	
G42	H3204G0031	Oil wick	1	1	1	1	
G43	H3200G2030	Clip	1	1	1	1	

G.LOWER SHAFT & FEED ROCK SHAFT MECHANISM

Fig No.	Part No.	Name	WF925	WF926	WF925/AUT	WF926/AUT	Description
G44	HA104G0012	Screw	2	2	2	2	SM3/16（28）×12
G45	H4905H8001	Feed connection crank (left)			1	1	
G45	H3205G1032	Feed connection crank (left)	1	1			
G46	H32243G205	Feed bar shaft	1	1	1	1	
G47	H3205G0662	Oil wick	1	1	1	1	
G48	H32211G205	Bolt	2	2	2	2	SM1/8(40)×7
G49	H429050050	Bolt	1	1	1	1	GB/T78 M5×5
G50	H32211GC05	Feed bar		1			
G50	H4805H8001	Feed bar	1		1		
50	H4942H8001	Feed bar				1	
G51	H3200H2040	Screw	1	1	1	1	SM15/64(28)×17
G52	H2013J0065	Washer	1	1	1	1	
G53	H003002030	Nut		1		1	GB/T6170 M3
G54	H429030140	Screw		1		1	GB/T78 M3×14
G55	H3205H0653	Screw	1	1	1	1	SM1/8（44）×4
G56	H3205H0652	Felt	1	1	1	1	
G57	H4743H8001	Feed bar forked connection	1	1	1	1	

WF925

WF926

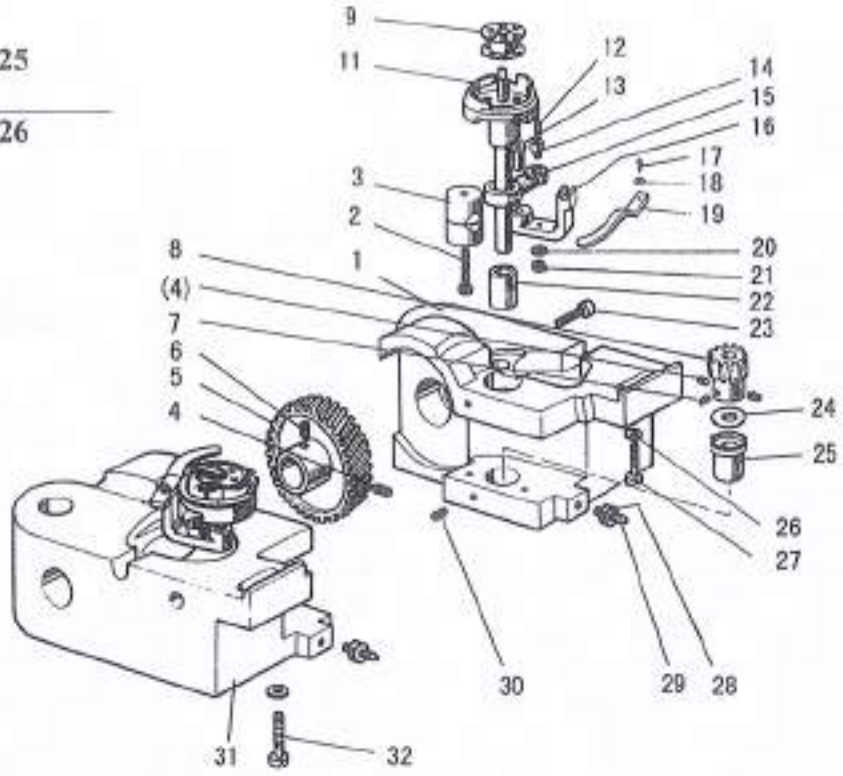

WF925/AUT

WF926/AUT

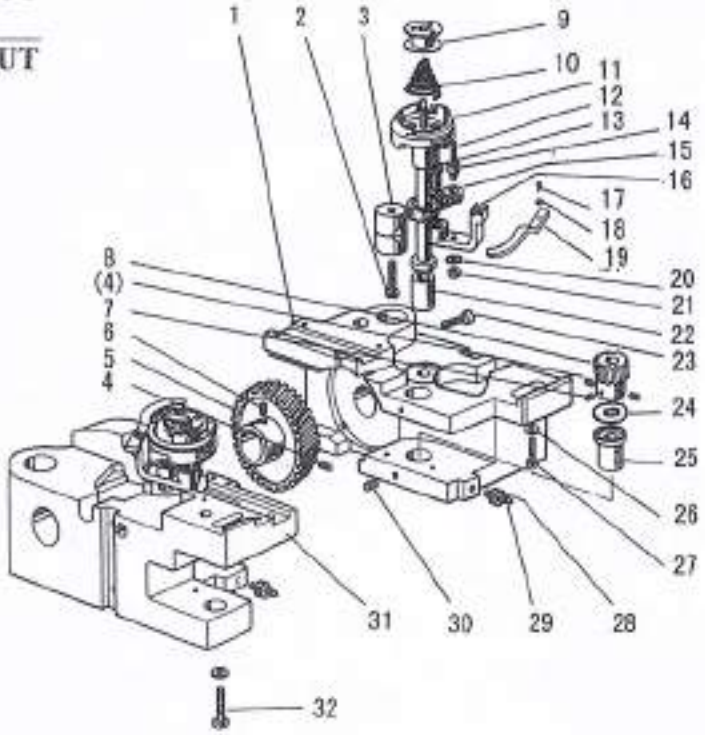

H.HOOK SADDLE MECHANISM

Fig. No.	Part No.	Description	WF925	WF926	WF925/AUT	WF926/AUT	Remarks
H01	H3304I0651	Hook saddle (right)	1	1			
H01	H4906I8001	Hook saddle (right)			1	1	
H02	H3207I0661	Screw	1	2	1	2	SM15/64 (28) ×22
H03	H3207I0662	Bushing	1	2	1	2	
H04	H4707I8001	Screw	3	6	3	6	SM1/4 (40) ×4
H05	H4706I8001	Hook driving gear (large)	1	2	1	2	
H06	H4708I8001	Screw	1	2	1	2	SM1/4 (40) ×6.5
H07	H4709I8001	Screw	1	2	1	2	SM1/4 (40) ×5
H08	H4705I8001	Hook driving gear (small)	1	2	1	2	
H09	H3306I0067	Bobbin	1	2			
H09	H4912I8001	Bobbin			1	2	BO-B872(A)
H10	H4922I8001	Spring			1	2	
H11	H4908I7101	Hook complete			1	2	
H11	H4708I7101	Hook complete	1	2			
H12	H3204I0656	Oil wick	2	4	2	4	
H13	H32153I504	Opener bracket shaft	1	2	1	2	
H14	H32153I204	Screw	1	2	1	2	SM3/16 (32) ×7.8
H15	H33131I204	Link	1	2	1	2	
H16	H33131I104	Opener bracket	1	2	1	2	
H17	H2004J0067	Screw	1	2	1	2	
H18	H3200I2030	Washer	1	2	1	2	
H19	H3305I0066	Opener	1	2	1	2	
H20	H005008050	Spring washer	1	2	1	2	GB/T93 5
H21	HA104G0658	Nut	1	2	1	2	
H22	H33121I104	Hook shaft bushing (upper)	1	2			
H22	H4909I8001	Hook shaft bushing (upper)			1	2	
H23	H3204I0657	Screw	1	2	1	2	SM3/16 (28) ×14.5
H24	H33121I204	Washer	1	2			
H24	H4910I8001	Washer			1	2	
H25	H3204I0653	Hook shaft bushing (lower)	1	2			
H25	H4911I8001	Hook shaft bushing (lower)			1	2	
H26	H2013J0065	Washer	1	2	1	2	
H27	H3200I2050	Screw	1	1	1	1	SM1/4 (24) ×23
H28	H3204I0659	Nut	1	2			
H28	H4914I8001	Nut			1	2	
H29	H3204I0658	Screw	1	2			
H29	H4915I8001	Screw			1	2	SM3/16 (28) ×11.5
H30	HA305E0662	Screw			2	4	SM15/64 (28) ×4.5
H31	H4917I8001	Hook saddle (left)				1	
H31	H3307I0681	Hook saddle (left)		1			
H32	H3200I2050	Screw	1	2			SM1/4 (24) ×23
H32	H4913I8001	Screw			1	2	SM1/4 (24) ×30

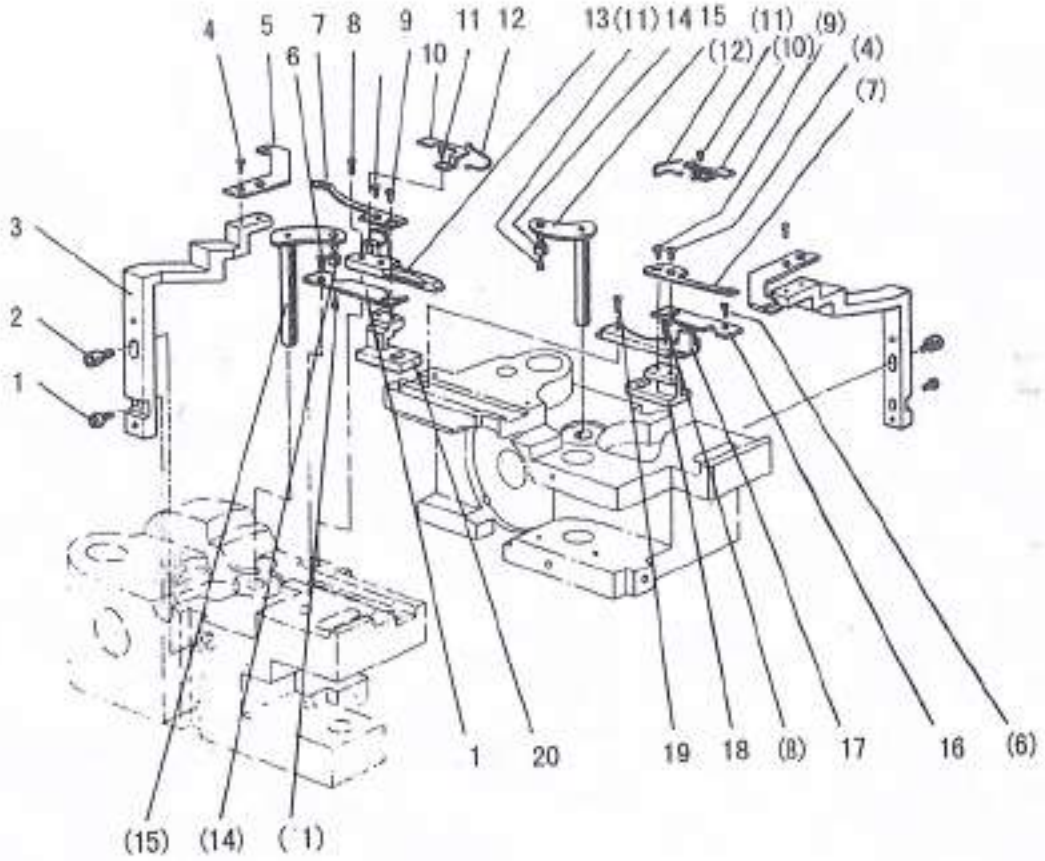
4
5
7
8
9
11
12
13(11)
14
15
(11)
(9)
6
10
(12)
(10)
(4)
(7)
3
2
1
1
20
19
18
(8)
17
16
(6)
(15)
(14)
(1)

I.UPPER FEED ROCK SHAFT MECHANISM

Fig. No.	Part No.	Name			WF925/AUT	WF926/AUT	Description
I01	H4905J8001	Screw			1	2	
I02	H4906J8001	Bolt			1	2	SM11/64 (40) ×12
I03	H4907J8001	Trimming knife holder			1	2	
I04	H4908J8001	Screw			3	6	SM9/64 (40) ×4
I05	H4909J8001	Fixed blade			1	2	
I06	H4914B8001	Screw			2	4	SM9/64 (40) ×4
I07	H4911J8001	Moved knife			1	2	
I08	H4912J8001	Screw			1	2	SM1/8 (44) ×9.2
I09	H4913J8001	Screw			1	2	SM9/64 (40) ×4.5
I10	H4914J8001	Spring plate			1	2	
I11	H4915J8001	Screw			3	6	SM3/32 (56) ×3.8
I12	H4916J8001	Reversing spring			1	2	
I13	H4917J8001	Guide			1	1	
I14	H4920J8001	Roller			1	2	
I15	H4921J8001	Lever			1	2	
I16	H4922J8001	Cover			1	1	
I17	H4923J8001	Guide (right)			1	1	
I18	H4924J8001	Knife pad (right)			1	1	
I19	H4925J8001	Screw			1	1	SM9/64 (40) ×9.5
I20	H4926J8001	Knife pad (left)			1	1	
I21	H4927J8001	Cover			1	1	

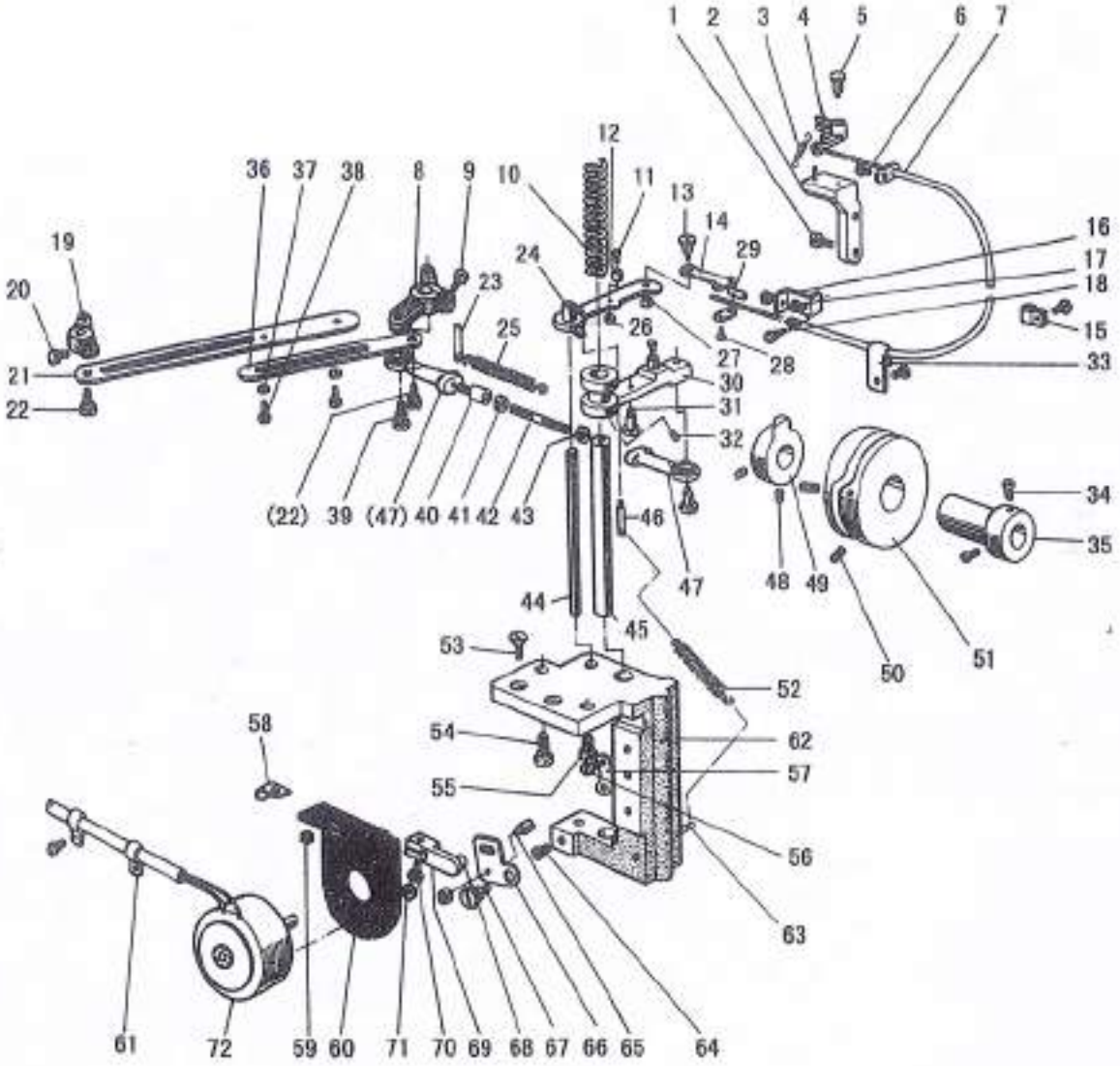
1
2
3
4
5
6
7
12
36
37
38
8
9
10
11
13
14
29
16
17
18
19
20
24
23
25
26
27
28
15
33
21
22
30
31
32
(22)
39
(47)
40
41
42
43
46
34
35
47
48
49
44
45
50
51
53
52
58
54
62
57
55
56
63
61
72
59
60
71
70
69
68
67
66
65
64

J.KNIFE MECHANISM

Fig. No.	Part No.	Name			WF925/AUT	WF926/AUT	Description
J01	HA300C2020	Screw			2	2	SM11/64 (40) ×8
J02	H4915K7101	Thread releading bracket			1	1	
J03	H4918K8001	Spring			1	1	
J04	H4919K7101	Thread releading plate			1	1	
J05	H2400I2040	Screw			1	1	SM11/64 (40) ×5
J06	HA300B2170	Screw			4	4	SM11/64 (40) ×8
J07	H4923K7101	Flexible wire complete			1	1	
J08	H4912K8001	Arm			1	1	
J09	H4913K8001	Bolt			1	1	SM15/64 (28) ×12.5
J10	H4945K8001	Spring			1	1	
J11	H4950K8001	Screw			1	1	SM11/64 (40) ×3.6
J12	H4949K8001	Roller			1	1	
J13	H4952K8001	Screw			1	1	SM3/16 (28) ×5
J14	H4953K8001	Mounting plate			1	1	
J15	HA700Q0030	Nylon clip			1	1	
J16	H4925K8001	Mounting plate			1	1	
J17	H003002050	Nut			2	2	GB/T6170 M5
J18	HA300C2030	Screw			1	1	SM11/64 (40) ×7
J19	H4908K8001	Arm				1	
J20	H4907K8001	Bolt				1	SM15/64 (28) ×12.5
J21	H4906K8001	Link				1	
J22	H4905K8001	Screw			2	2	M5(0.5)×7.5
J23	HA100H2080	Pin type			1	1	
J24	H4946K7101	Thread releasing lever			1	1	
J25	H4943K8001	Spring			1	1	
J26	H4951K8001	Nut			1	1	SM11/64 (40)
J27	H4954K8001	Nut			1	1	SM3/16 (28)
J28	H4956K8001	Screw			2	2	SM1/8 (44) ×7
J29	H4955K8001	Bushing			1	1	
J30	H4957K7101	Vibrating crank			1	1	
J31	H4944K8001	Screw			1	1	SM11/64 (40) ×5.5
J32	H3205G1114	Screw			2	2	M5×5
J33	HA708P0668	Nylon clip			1	1	
J34	HA113F0684	Screw			2	2	SM15/64 (28) ×8.5
J35	H4931K8001	Bushing			1	1	
J36	H4909K8001	Link				1	
J37	H005001050	Washer				1	GB/T97.1 5
J38	H4911K8001	Bolt				2	
J39	H4936K8001	Screw			2	2	M5(0.5)×8.5
J40	H4987K8001	Bolt			1	1	
J41	H4940K8001	Nut (left)			1	1	M5(left)
J42	H4939K8001	Bolt			1	1	
J43	H003002050	Nut (right)			1	1	GB/T6170 M5

J.KNIFE MECHANISM

Fig. No.	Part No.	Name			WF925/AUT	WF926/AUT	Description
J44	H4964K8001	Shaft			1	1	
J45	H4963K8001	Shaft			1	1	
J46	H4985K8001	Screw			1	1	SM11/64 (40) ×4
J47	H3405D0663	Ball joint (right)			2	2	
J48	H3205G1114	Screw			4	4	M4×4
J49	H4934K8001	Cam			1	1	
J50	HA710E0692	Screw			2	2	SM1/4 (40) ×9.5
J51	H4932K8001	Cam			1	1	
J52	H4986K8001	Spring			1	1	
J53	H411050160	Screw			2	2	GB/T819.1 M5×16
J54	H2012N0652	Screw			1	1	SM1/4 (24) ×16
J55	H4983K8001	Screw			1	1	SM1/4 (24) ×13
J56	H4967K8001	Screw			3	3	SM11/64 (40) ×7
J57	H4966K8001	Stopper			1	1	
J58	H4981K8001	Holder			1	1	
J59	H003008050	Nut			2	2	GB/T6172.1 M5
J60	H4977K8001	Mounting plate			1	1	
J61	H4980K8001	Holder			2	2	
J62	H4965K8001	Set plate			1	1	
J63	H3700E2080	Pin type			1	1	
J64	H4969K8001	Screw			1	1	SM11/64 (40) ×8.5
J65	H4970K8001	Screw			1	1	SM11/64 (40) ×6
J66	H4971K8001	Lever			1	1	
J67	H4972K8001	Screw			1	1	SM11/64 (40) ×6.8
J68	H4973K8001	Pin			1	1	
J69	H4974K8001	Arm			1	1	
J70	HA111G0683	Screw			1	1	SM11/64 (40) ×12
J71	HA7111N304	Nut			1	1	SM11/64 (40)
J72	H4979K8001	Solenoid complete			1	1	

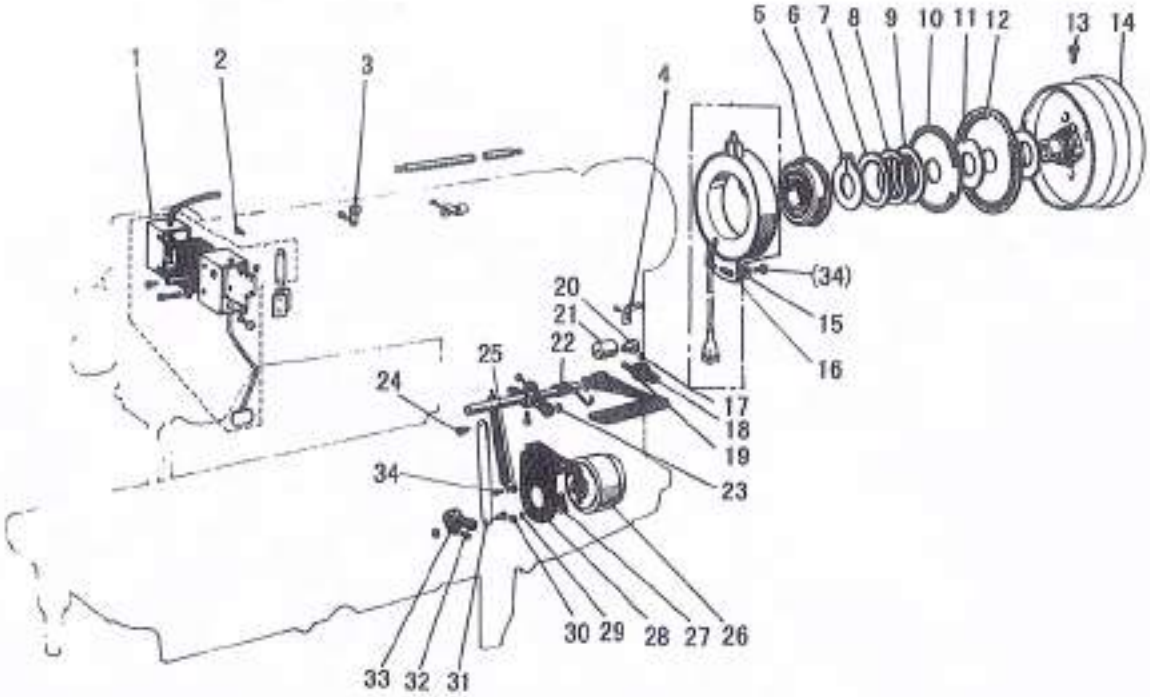
1
2
3
4
5
6
7
8
9
10
11
12
13
14
(34)
15
16
17
18
19
20
21
22
23
24
25
26
27
28
29
30
31
32
33
34

K.TOUCH BACK MECHANISM & DETECTOR MECHANISM

Fig. No.	Part No.	Name			WF925/AUT	WF926/AUT	Description
K01	H4905L7101	Touth switch complete			1	1	
K02	H4918L8001	Screw			4	4	M5
K03	HA700Q0030	Holder			2	2	
K04	H4922L8001	Holder			1	1	
K05	H3205J0662	Ball bearing			1	1	
K06	H007009300	Retaining ring C-type			1	1	GB/T894.1 30
K07	HA700R0060	Washer			1	1	
K08	HA700R0050	Support spring			1	1	
K09	HA700R0040	Spacer B			1	1	
K10	H4928L8001	Speed command disk F20 (up)			1	1	
K11	HA700R0030	Spacer A			2	2	
K12	H4930L8001	Speed command disk F11 (down)			1	1	
K13	HA110D0672	Screw			2	2	SM15/64（28）×12
K14	H4931L8001	Pulley (complete)			1	1	
K15	HA703R0067	Washer			1	1	
K16	HA703R0065	Detector bracket (complete)			1	1	
K17	HA3411D308	Screw			1	1	SM15/64（28）×7
K18	H4936L8001	Lever			1	1	
K19	HA113F0684	Screw			1	1	SM15/64（28）×7.5
K20	H4937L8001	Screw			1	1	SM15/64（28）×6
K21	H4938L8001	Rubber ring			1	1	
K22	H4939L8001	Spring			1	1	
K23	H4940L8001	Nut			2	2	
K24	H4941L8001	Screw			2	2	SM15/64（28）×14
K25	H4942L8001	Nut			1	1	
K26	H4943L8001	Solenold (complete)			1	1	
K27	H102080120	Blot			2	2	GB/T5781 M8×12
K28	H4945L8001	Set plate			1	1	
K29	H005008060	Spring washer			2	2	GB/T93 6
K30	H003002060	Nut			2	2	GB/T6170 M6
K31	H4948L8001	Link			1	1	
K32	H4949L8001	Blot			1	1	SM15/64（28）×13
K33	H4950L8001	Arm			1	1	
K34	HA300C2030	Screw			2	2	SM11/64（40）×8

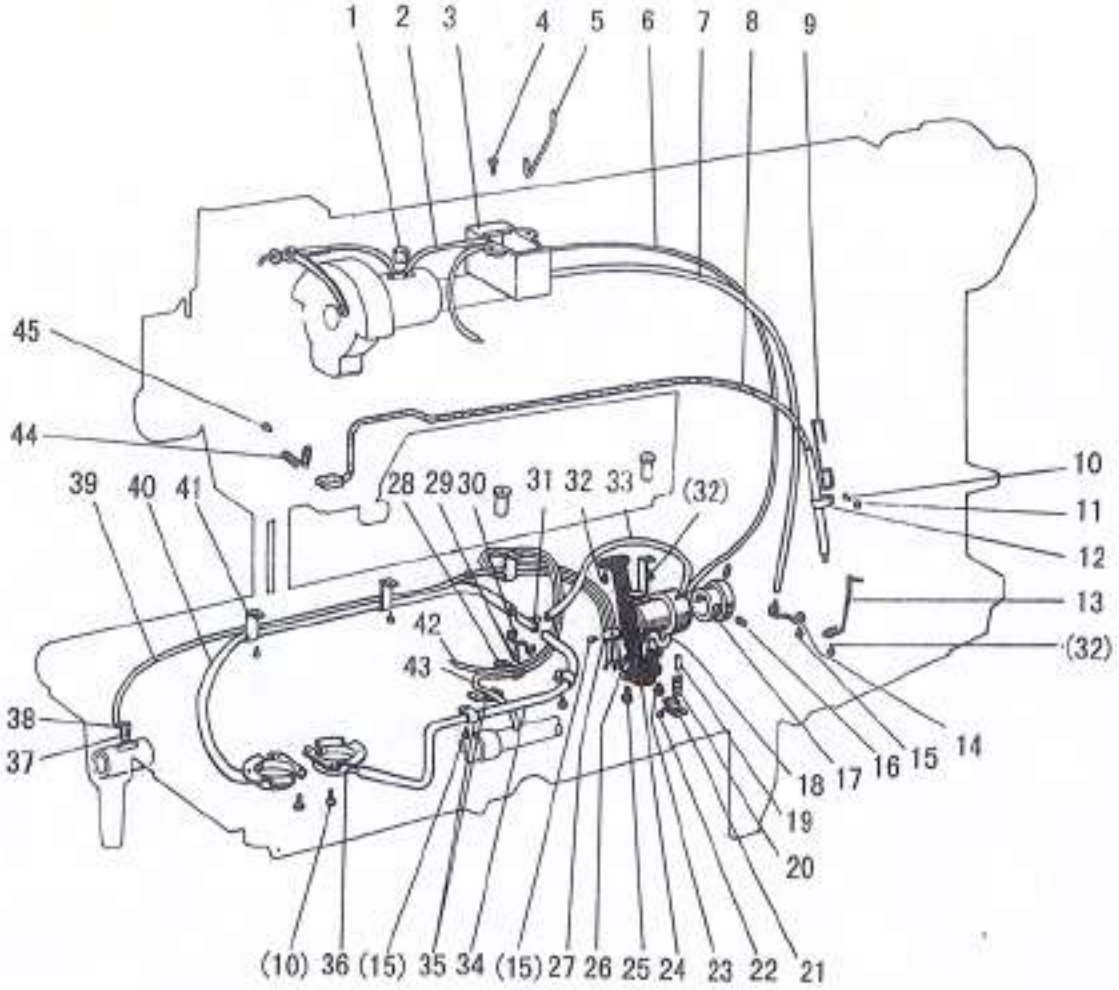
1
2
3
4
5
6
7
8
9
45
44
39
40
41
28
29
30
31
32
33
(32)
10
11
12
13
(32)
42
43
38
37
14
15
16
17
18
19
20
(10)
36
(15)
35
34
(15)
27
26
25
24
23
22
21

L.OIL LUBRICATION MECHANISM

Fig. No.	Part No.	Name	WF925	WF926	WF925/AUT	WF926/AUT	Description
L01	H32175B304	Felt	1	1	1	1	
L02	H4705J7101	Oil pipe complete	1	1	1	1	
L03	H3204K0011	Oil reservoir complete	1	1	1	1	
L04	H411040160	Screw	2	2	2	2	GB/T819.1 M4×16
L05	H4707J8001	Holder	1	1	1	1	
L06	H4708J8001	Oil pipe Φ 3 x 1 x 400	1	1	1	1	
L07	H4709J8001	Oil pipe Φ 5 x 1 x 360	1	1	1	1	
L08	H4711J7101	Oil reservoir complete	1	1	1	1	
L09	H4713J8001	Holder	1	1	1	1	
L10	HA7311CC06	Screw	7	7	7	7	SM9/64 (40) ×6.5
L11	HA100I2050	Spring washer	1	1	1	1	
L12	H2000M0110	Holder	1	1	1	1	
L13	H4714J8001	Holder	1	1	1	1	
L14	H4715J8001	Holder	1	1	1	1	
L15	HA106B0676	Screw	8	8	8	8	SM9/64 (40) ×4.5
L16	H3230K0751	Screw	2	2	2	2	
L17	H4716J8001	Bushing	1	1	1	1	
L18	H3215K0696	Oil pipe	1	1	1	1	
L19	H110012070	Pin	1	1	1	1	
L20	H110012090	Spring	1	1	1	1	
L21	H110012110	Spring holder	1	1	1	1	
L22	H3204D6510	Screw	1	1	1	1	SM1/8 (44) ×4.5
L23	H3215K0693	Screw	1	1	1	1	SM9/64 (40) ×5
L24	H3215K0692	Filter	1	1	1	1	
L25	H3215K0694	Screw	1	1	1	1	SM9/64 (40) ×7
L26	H4718J7101	Mounting plate complete	1	1	1	1	
L27	H3215K0695	Holder	1	1	1	1	
L28	H3200K0170	Holder	1	1	1	1	
L29	HA7311CC06	Screw		1		1	SM9/64 (40) ×6.5
L30	H3210K0674	Holder		1		1	
L31	H3210K0671	Oil pipe joint		1		1	
L32	HA100E2150	Screw	4	4	4	4	SM11/64 (40) ×9
L33	H4721J8001	Oil pipe Φ3×1×90		1		1	
L34	H4805J8001	Oil pipe Φ3×1×370	1		1		
L35	H4723J8001	Oil pipe Φ3×1×300		1		1	
L36	H2000M0110	Holder	3	3	3	3	
L37	H3211K0068	Oil reservoir complete	2	2	2	2	
L38	H3200K0180	Oil wick Φ2.5×35	3	3	3	3	
L39	H4735J8001	Oil pipe	1	1	1	1	
L40	H4724J8001	Oil pipe Φ 3 × 1 × 445	1	1	1	1	
L41	H3200K0160	Holder	3	3	3	3	
L42	H4725J7101	Oil wick	1	1	1	1	
L43	H4728J7101	Oil wick	1	1	1	1	

L.OIL LUBRICATION MECHANISM

Fig. No.	Part No.	Name	WF925	WF926	WF925/AUT	WF926/AUT	Description
L44	H4731J8001	Holder	1	1	1	1	
L45	HA300C2030	Screw	1	1	1	1	

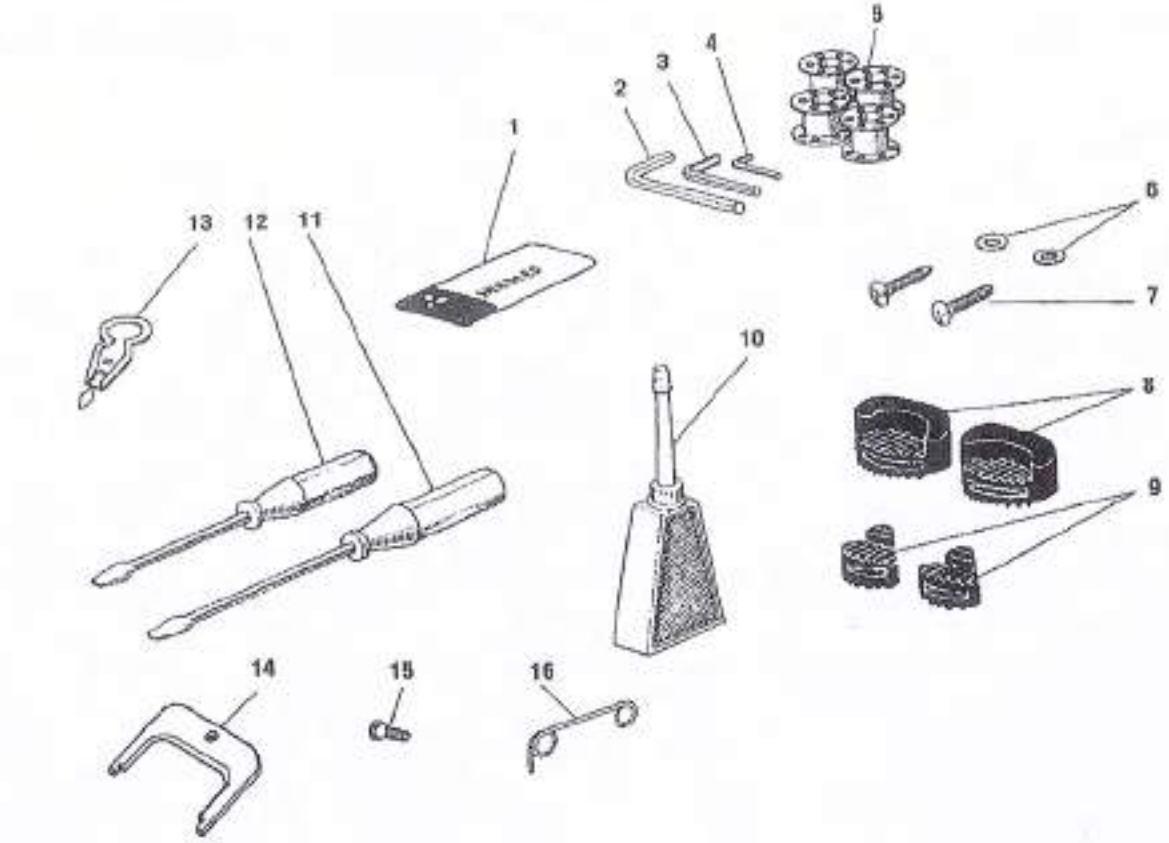
1
2
3
4
5
6
7
8
9
10
11
12
13
14
15
16

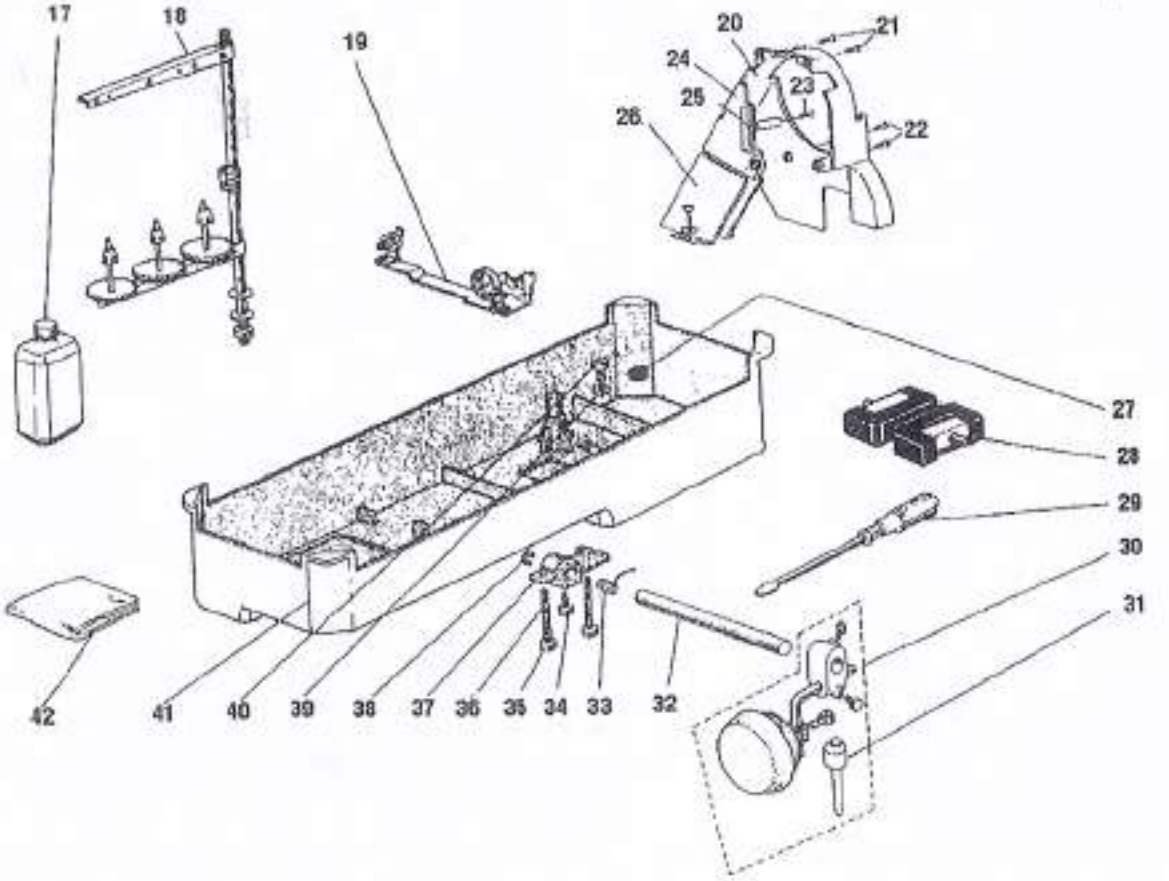
17
18
19
20
21
22
23
24
25
26
27
28
29
30
31
32
33
34
35
36
37
38
39
40
41
42

M.ACCESSORIES

Fig. No.	Part No.	Name	WF925	WF926	WF925/AUT	WF926/AUT	Description
M01	H4740F8001	Needle DP×17-23	3	6	3	6	
M02	H3209L8001	Socket wrench			1	1	
M03	H3208L8001	Socket wrench	1	1	1	1	
M04	H4905N8001	Socket wrench			1	1	
M05	H3306I0067	Bobbin	2	4			
M05	H4912I8001	Washer			2	4	B0-B872 (A)
M06	H3200L0050	Screw	2	2	2	2	
M07	H801045200	Vibration preventing rubber	4	4	4	4	GB/T99 4.5×20
M08	H4700K0020	Vibration preventing rubber	2	2	2	2	
M09	H4700K0030	Vibration preventing rubber	2	2	2	2	
M10	HA100J2110	Oiler	1	1	1	1	
M11	HA100J2140	Screw driver (middle)	1	1	1	1	
M12	HA100J2150	Screw driver (small)	1	1	1	1	
M13	H3207L0065	Thread a needle kit	1	1	1	1	
M14	HA704S0654	Adjusting plate for speed command disk			1	1	
M15	H409030060	Screw			1	1	GB/T818 M3×6
M16	H4907N8001	Thread guide			1	1	
M17	H3200L0130	Oil can	1	1	1	1	
M18	H3200L0120	Cotton stand	1	1	1	1	
M19	H3300L0040	Bobbin winder	1	1	1	1	
M20	H2008O0068	Belt cover			1	1	
M21	HA300C2170	Screw			2	2	SM11/64(40)×8
M22	HA300J2280	Screw	2	2	2	2	SM11/64(28)×8
M23	HA300J2250	Screw			1	1	M4×8
M24	H2405B6601	Belt cover complete	1	1			
M24	H4953N7101	Belt cover complete			1	1	
M25	H003008040	Nut			1	1	GB/T6172.1 M4
M26	HA305J0665	Belt cover	1	1	1	1	
M27	HA100J2120	Magnet block for reservoir	1	1	1	1	
M28	HA307J0067	Hinge complete	2	2	2	2	
M29	HA300J2070	Screw driver (large)	1	1	1	1	
M30	H3214L0067	Small parts	1	1	1	1	
M31	H3214L2011	Knee lifter pin	1	1	1	1	
M32	H3213L0662	Knee lift shaft	1	1	1	1	
M33	HA104J0657	Spring	1	1	1	1	
M34	HA106J0664	Bolt	1	1	1	1	
M35	HA104J6510	Nut	2	2	2	2	
M36	HA104J0659	Screw	2	2	2	2	
M37	H3213L0664	Knee lifter crank	1	1	1	1	
M38	H007013090	E-type stop ring	1	1	1	1	GB/T896 9
M39	HA104J0653	Washer	1	1	1	1	
M40	HA104J0652	Screw	1	1	1	1	
M41	H3213L0661	Oil reservoir	1	1	1	1	

M ACCESSORIES

Ref. No.	Part No.	Name	WF925	WF926	WF925/AUT	WF926/AUT	Description
M42	HA100J2180	Vinyl cover	1	1	1	1	
M43	HS218L0681	Felt	1	1	1	1	

Gauge Parts List

Gauge Size	Needle Plate	Presser Foot (Inside)	Presser Foot	Needle Clamp	Feed Dog	Slide Plate(L)	Slide Plate(R)
WF926							
1/8(3.2mm)	H4737B8001	H4741F8001	H4758E8001	H4750F8001	H4745H8001	H4732B8001	H4733B8001
5/32(4mm)	H4738B8001	H4742F8001	H4759E8001	H4751F8001	H4746H8001	H4732B8001	H4733B8001
3/16(4.8mm)	H4739B8001	H4743F8001	H4760E8001	H4752F8001	H4747H8001	H4732B8001	H4733B8001
1/4(6.4mm)	H4734B8001	H4737F8001	H4757E8001	H4739F8001	H4744H8001	H4732B8001	H4733B8001
5/16(8mm)	H4740B8001	H4744F8001	H4761E8001	H4753F8001	H4748H8001	H4746B8001	H4733B8001
3/8(9.5mm)	H4741B8001	H4745F8001	H4762E8001	H4754F8001	H4749H8001	H4746B8001	H4733B8001
1/2(12.7mm)	H4742B8001	H4746F8001	H4763E8001	H4755F8001	H4750H8001	H4747B8001	H4750B8001
5/8(16mm)	H4743B8001	H4747F8001	H4764E8001	H4756F8001	H4751H8001	H4747B8001	H4750B8001
3/4(19mm)	H4744B8001	H4748F8001	H4765E8001	H4757F8001	H4752H8001	H4748B8001	H4750B8001
1(25.4mm)	H4745B8001	H4749F8001	H4766E8001	H4758F8001	H4753H8001	H4749B8001	H4750B8001
WF926/AUT							
1/8(3.2mm)	H4937B8001	H4741F8001	H4758E8001	H4750F8001	H4945H8001	H4732B8001	H4733B8001
5/32(4mm)	H4938B8001	H4742F8001	H4759E8001	H4751F8001	H4946H8001	H4732B8001	H4733B8001
3/16(4.8mm)	H4939B8001	H4743F8001	H4760E8001	H4752F8001	H4947H8001	H4732B8001	H4733B8001
1/4(6.4mm)	H4917B8001	H4737F8001	H4757E8001	H4739F8001	H4944H8001	H4732B8001	H4733B8001
5/16(8mm)	H4940B8001	H4744F8001	H4761E8001	H4753F8001	H4948H8001	H4746B8001	H4733B8001
3/8(9.5mm)	H4941B8001	H4745F8001	H4762E8001	H4754F8001	H4949H8001	H4746B8001	H4733B8001
1/2(12.7mm)	H4942B8001	H4746F8001	H4763E8001	H4755F8001	H4950H8001	H4747B8001	H4733B8001
5/8(16mm)	H4943B8001	H4747F8001	H4764E8001	H4756F8001	H4951H8001	H4747B8001	H4733B8001
3/4(19mm)	H4944B8001	H4748F8001	H4765E8001	H4757F8001	H4952H8001	H4748B8001	H4750B8001
1(25.4mm)	H4945B8001	H4749F8001	H4766E8001	H4758F8001	H4953H8001	H4749B8001	H4750B8001
WF925							
	H4814B8001	H4807F8001	H3100G2110		H4807H8001	H4812B8001	H4813B8001
WF925/AUT							
	H5014B8001	H4807F8001	H3100G2110		H5004H8001	H4812B8001	H4813B8001