# A.ARM BED AND ITS ACCESSORIES

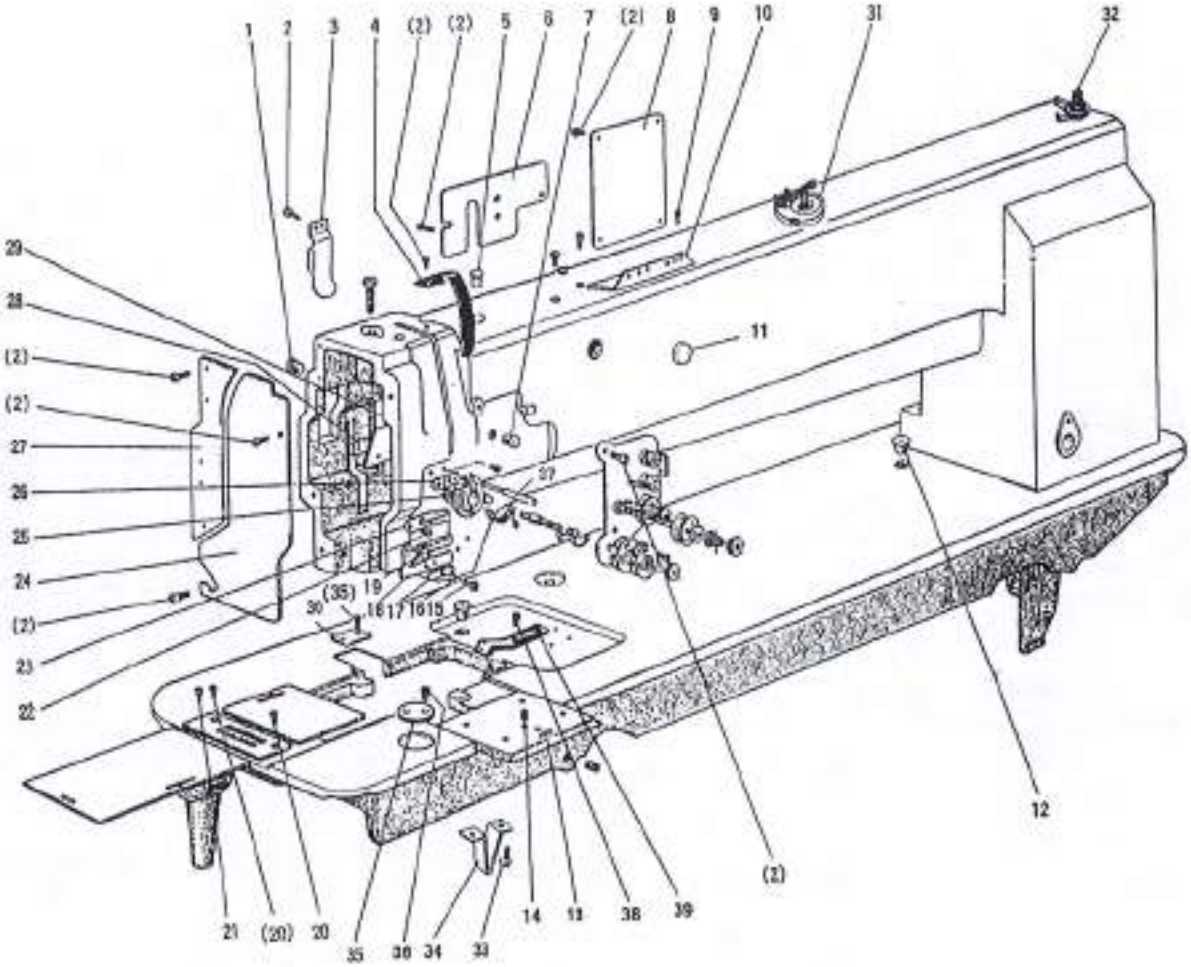

# A.ARM BED AND ITS ACCESSORIES

| Fig. No. | Part No. | Description | WF925-60 | WF926-60 | WF925-60/AUT | WF926-60/AUT | Remarks |
|---|---|---|---|---|---|---|---|
| A01 | HA300B2090 | Rubber plug | 2 | 2 | 2 | 2 | |
| A02 | HA300B2170 | Screw | 15 | 15 | 15 | 15 | SM11/64 (40) ×8 |
| A03 | H4716B8001 | Oil guard plate | 1 | 1 | 1 | 1 | |
| A04 | H4717B8001 | Thread take-up cover | 1 | 1 | 1 | 1 | |
| A05 | H4715B8001 | Rubber plug | 1 | 1 | 1 | 1 | φ13 |
| A06 | H4718B8001 | Side cover (left) | 1 | 1 | 1 | 1 | |
| A07 | H2000B2010 | Rubber plug | 1 | 1 | 1 | 1 | φ13 |
| A08 | H4919B8001 | Side cover (right) | | | 1 | 1 | |
| A08 | H4719B8001 | Side cover (right) | 1 | 1 | | | |
| A09 | HA700B2060 | Screw | 2 | 2 | 2 | 2 | SM11/64 (40) ×8 |
| A10 | H2400B2100 | Thread guide | 1 | 1 | 1 | 1 | |
| A11 | HA307B0673 | Rubber plug | 1 | 1 | 1 | 1 | |
| A12 | H2000M0080 | Cap | 2 | 2 | 2 | 2 | |
| A13 | H3219B0067 | Slide plate complete | | 1 | | 1 | |
| A14 | H3200B2170 | Screw | | 1 | | 1 | SM13/64 (32) ×4.8 |
| A15 | H4722B8001 | Screw | 1 | 1 | 1 | 1 | SM1/8 (44) ×3 |
| A16 | H4723B8001 | Spring | 1 | 1 | 1 | 1 | |
| A17 | H4724B8001 | Plate | 1 | 1 | 1 | 1 | |
| A18 | H4725B8001 | Thread guide | 1 | 1 | 1 | 1 | |
| A19 | H3200B2100 | Screw | 1 | 1 | 1 | 1 | SM9/64 (40) ×6.5 |
| A20 | HA300B2190 | Screw | 2 | 1 | 2 | 1 | SM11/64 (40) ×8 |
| A21 | H3200B2120 | Screw | | 1 | | 1 | SM9/64 (36) ×6.5 |
| A22 | H3000D2160 | Screw | 1 | 1 | 1 | 1 | SM9/64 (40) ×6.5 |
| A23 | H4726B8001 | Thread guide (middle) | 1 | 1 | 1 | 1 | |
| A24 | H4727B8001 | Face plate | 1 | 1 | 1 | 1 | |
| A25 | H2400B2080 | Screw | 2 | 2 | 2 | 2 | SM3/16 (28) ×11 |
| A26 | H2400B2070 | Thread guide (upper) | 1 | 1 | 1 | 1 | |
| A27 | H4730B8001 | Guide mounting plate | 1 | 1 | 1 | 1 | |
| A28 | H2400B2060 | Plate for oil guard | 1 | 1 | 1 | 1 | |
| A29 | H3200B2060 | Oil guard | 1 | 1 | 1 | 1 | |
| A30 | H4911B8001 | Cover | | | | 1 | |
| A30 | H5015B8001 | Cover | | | 1 | | |
| A31 | H7007D7101 | Bobbin complete | 1 | 1 | 1 | 1 | |
| A32 | H7014D7101 | Down-lead complete | 1 | 1 | 1 | 1 | |
| A33 | H4912B8001 | Screw | | | 2 | 2 | SM1/4 (24) ×9 |
| A34 | H4913B8001 | Supporter | | | 1 | 1 | |
| A35 | H4915B8001 | Cover | | | | 1 | |
| A36 | H4914B8001 | Screw | | | 2 | 4 | SM9/64 (40) ×6 |
| A37 | H4916B8001 | Pin | | | 1 | 1 | |
| A38 | H4742E8001 | Screw | 2 | | 2 | | SM11/64 (40) ×6 |
| A39 | H4751B8001 | Tension releasing plate | 1 | | 1 | | |

## B.THREAD TENSION REGULATOR MECHANISM

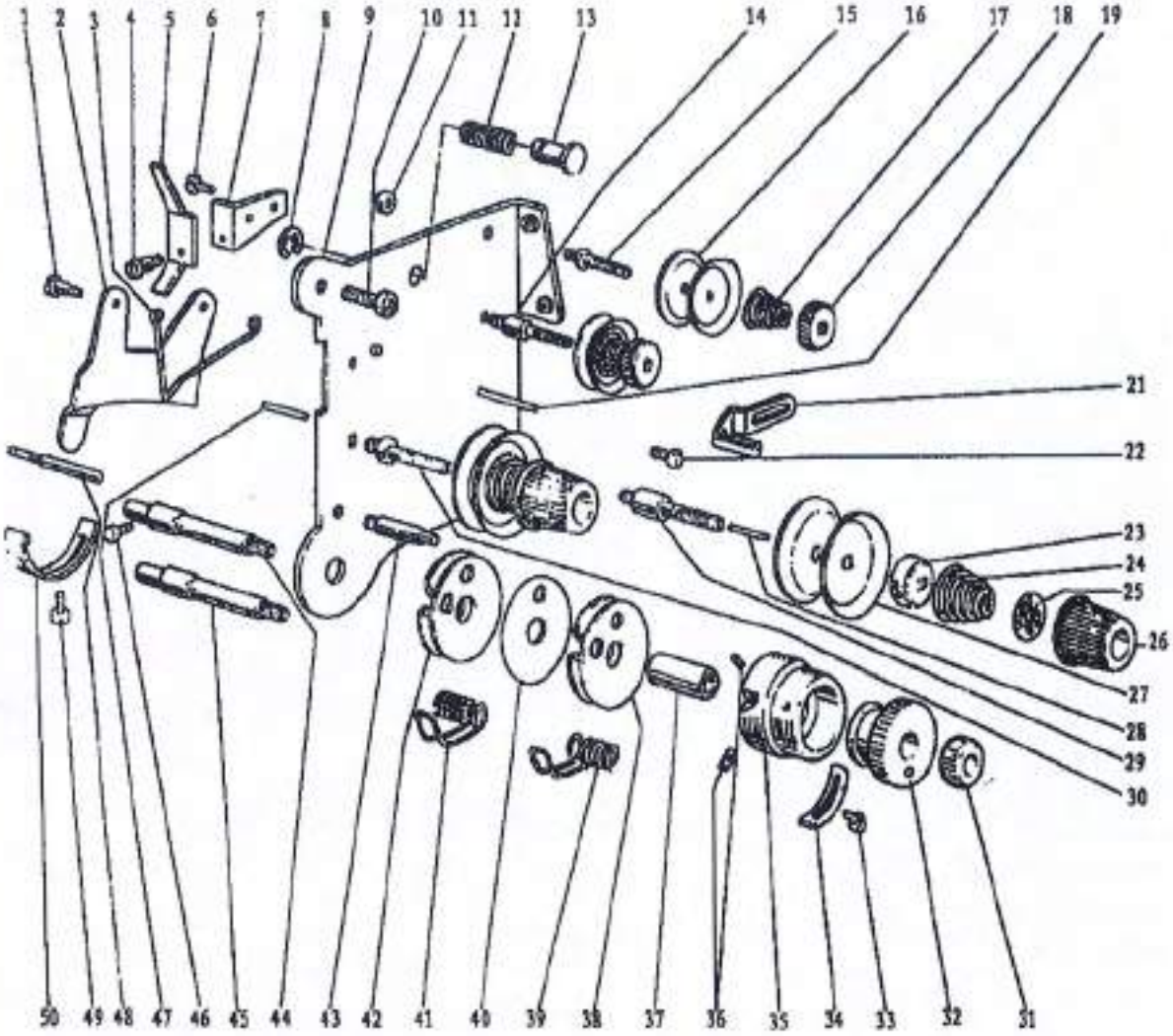

# B.THREAD TENSION REGULATOR MECHANISM

| Fig. No. | Part No. | Description | WF925-60 | WF926-60 | WF925-60/AUT | WF926-60/AUT | Remarks |
|---|---|---|---|---|---|---|---|
| B01 | H3221B6811 | Screw | 2 | 2 | 2 | 2 | SM9/64 (40) |
| B02 | H3221B3142 | Tension releasing plate | 1 | 1 | 1 | 1 | |
| B03 | H3221B6812 | Tension releasing spring | 1 | 1 | 1 | 1 | |
| B04 | H4705C8001 | Screw | 1 | 1 | 1 | 1 | SM9/64 (40) |
| B05 | H4706C8001 | Lever | 1 | 1 | 1 | 1 | |
| B06 | HA7311C306 | Screw | 1 | 1 | 1 | 1 | SM9/64 (40) ×4.5 |
| B07 | H4707C8001 | Mounting plate | 1 | 1 | 1 | 1 | |
| B08 | H007013050 | Stop ring | 1 | 1 | 1 | 1 | GB/T896 5 |
| B09 | H3221B6820 | Mounting plate | 1 | 1 | 1 | 1 | |
| B10 | HA300C2030 | Screw | 2 | 2 | 2 | 2 | |
| B11 | H3221B6810 | Nut | 1 | 1 | 1 | 1 | SM11/64 (40) |
| B12 | H4708C8001 | Spring | 1 | 1 | 1 | 1 | |
| B13 | H4709C8001 | Push button | 1 | 1 | 1 | 1 | |
| B14 | H3221B0685 | Thread tension stud | | 1 | | 1 | |
| B15 | H3221B0683 | Thread tension stud | 1 | 1 | 1 | 1 | |
| B16 | HA112B0693 | Thread tension disk | 2 | 4 | 2 | 4 | |
| B17 | H3221B0684 | Thread tension spring | 1 | 2 | 1 | 2 | |
| B18 | HA710B0671 | Thumb nut | 1 | 2 | 1 | 2 | |
| B19 | H3221B0682 | Pin | 2 | 3 | 2 | 3 | |
| B21 | H3306B0661 | Thread guide | 1 | 1 | 1 | 1 | |
| B22 | HA106B0676 | Screw | 1 | 1 | 1 | 1 | SM9/64 (40) ×6 |
| B23 | HA310B0702 | Thread tension releasing plate | 1 | 2 | 1 | 2 | |
| .B24 | H4710C8001 | Thread tension spring | 1 | 2 | 1 | 2 | |
| B25 | HA115B7010 | Thumb nut revolution stopper | 1 | 2 | 1 | 2 | |
| B26 | HA310B0701 | Thumb nut complete | 1 | 2 | 1 | 2 | |
| B27 | HA310B0705 | Thread tension disk | 2 | 4 | 2 | 4 | |
| B28 | H3221B6816 | Pin | | 1 | | 1 | |
| B29 | H3221B0689 | Thread tension stud | | 1 | | 1 | |
| B30 | H3221B0686 | Thread tension stud | 1 | 1 | 1 | 1 | |
| B31 | H32481B721 | Thumb nut | 1 | 1 | 1 | 1 | SM1/4 (40) |
| B32 | H32481B621 | Take-up spring guide | | 1 | | 1 | |
| B33 | H32481BC21 | Screw | | 1 | | 1 | SM9/64 (40) ×6 |
| B34 | H32481BB21 | Stopper | | 1 | | 1 | |
| B35 | H32481B921 | Thread tension post | | 1 | | 1 | |
| B36 | H32481B521 | Screw | | 2 | | 2 | SM1/8 (44) ×3.9 |
| B37 | H32481B821 | Bushing | | 1 | | 1 | |
| B38 | H32481BF21 | Plate complete | | 1 | | 1 | |
| B39 | H4712C8001 | Thread take-up spring | | 1 | | 1 | |
| B40 | H32481BE21 | Plate | | 1 | | 1 | |
| B41 | H4713C8001 | Thread take-up spring | 1 | 1 | 1 | 1 | |
| B42 | H32481BD21 | Plate complete | 1 | 1 | 1 | 1 | |
| B43 | H4804C8001 | Screw | 1 | | 1 | | |
| B43 | H32481B421 | Screw | | 1 | | 1 | SM9/64 (40) ×2.9 |

## B.THREAD TENSION REGULATOR MECHANISM

| Fig. No. | Part No. | Description | WF925-60 | WF926-60 | WF925-60/AUT | WF926-60/AUT | Remarks |
|---|---|---|---|---|---|---|---|
| B44 | H32481B121 | Thread tension stud | | 1 | | 1 | |
| B45 | H4805C8001 | Thread tension stud | 1 | | 1 | | |
| B46 | H3230K0751 | Screw | 1 | 1 | 1 | 1 | SM11/64（40）×10 |
| B47 | H3221B6817 | Pin | 1 | 1 | 1 | 1 | |
| B48 | H3221B6818 | Tension releasing pin | 1 | 1 | | | |
| B48 | H4916B8001 | Tension releasing pin | | | 1 | 1 | |
| B49 | H3200B2100 | Screw | 1 | 1 | 1 | 1 | SM9/64（40）×6.5 |
| B50 | H3221B6819 | Stopper | 1 | 1 | 1 | 1 | |

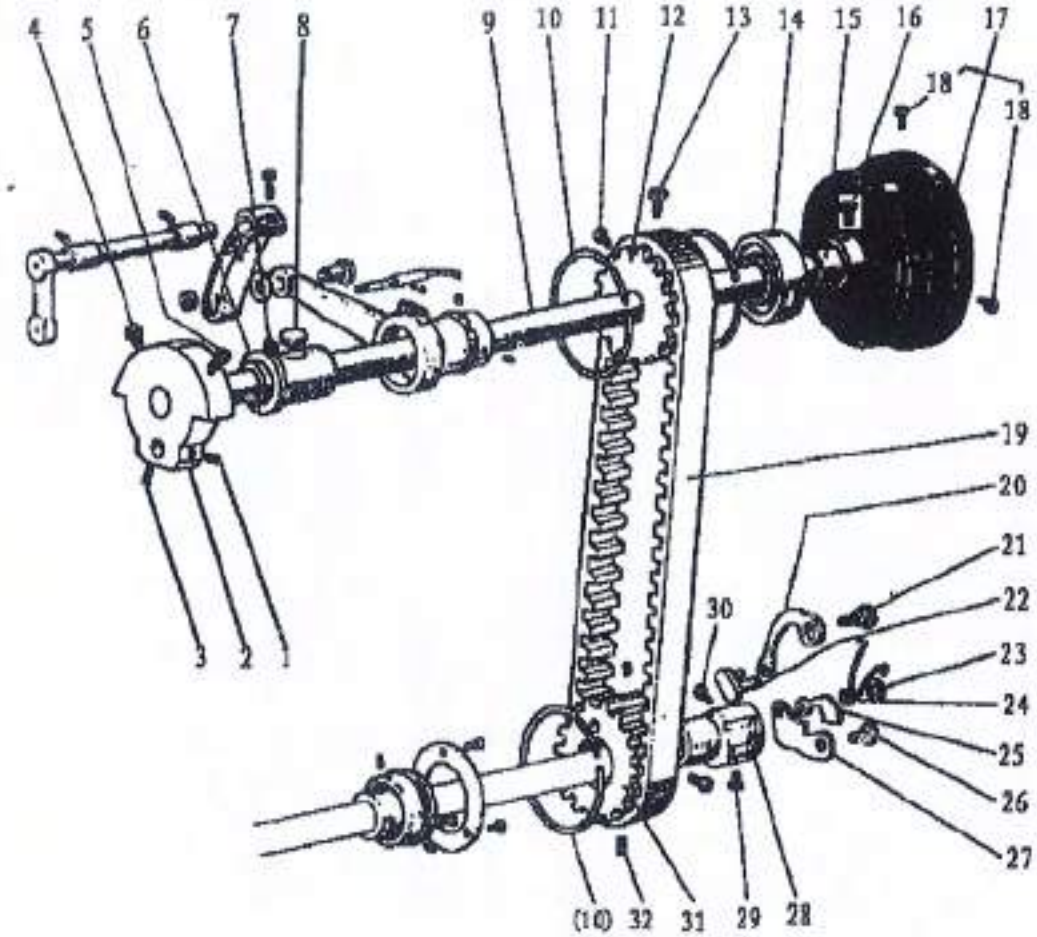
4
5
6
7
8
9
10
11
12
13
14
15
16
17
18
18
19
20
21
22
23
24
25
26
27
30
3
2
1
(10)
32
31
29
28

## C.ARM SHAFT MECHANISM

| Fig. No. | Part No. | Description | WF925-60 | WF926-60 | WF925-60/AUT | WF926-60/AUT | Remarks |
|---|---|---|---|---|---|---|---|
| C01 | HA307C0662 | Set screw | 1 | 1 | 1 | 1 | SM1/4 (40) ×7 |
| C02 | H4706D8001 | Crank | 1 | 1 | 1 | 1 | |
| C03 | HA105D0662 | Screw | 1 | 1 | 1 | 1 | SM1/4 (40) ×3.5 |
| C04 | HA100C2060 | Set screw | 1 | 1 | 1 | 1 | SM9/32 (28) ×14 |
| C05 | HA100C2070 | Screw | 1 | 1 | 1 | 1 | SM9/32 (28) ×13 |
| C06 | H32111B204 | Arm shaft bushing (left) | 1 | 1 | 1 | 1 | |
| C07 | H4708D8001 | Screw | 1 | 1 | 1 | 1 | SM1/4 (24) ×13 |
| C08 | H32111B104 | Felt | 1 | 1 | 1 | 1 | |
| C09 | H7004D8001 | Arm shaft | 1 | 1 | 1 | 1 | |
| C10 | H3205C0661 | Spring flange | 3 | 3 | 3 | 3 | |
| C11 | HA113F0684 | Screw | 1 | 1 | 1 | 1 | SM15/64 (28) ×8.5 |
| C12 | H3205C1021 | Belt pulley (upper) | 1 | 1 | 1 | 1 | |
| C13 | HA100F2130 | Screw | 1 | 1 | 1 | 1 | SM15/64 (28) ×14.5 |
| C14 | H3205J0662 | Bearing | 1 | 1 | | | |
| C15 | H3205J0661 | Collar | 1 | 1 | | | |
| C16 | HA113F0684 | Screw | 2 | 2 | | | SM15/64 (28) ×8.5 |
| C17 | H3204J0652 | Pulley | 1 | 1 | | | |
| C18 | HA110D0672 | Screw | 2 | 2 | | | SM11/64 (28) ×12 |
| C19 | H3200C2030 | Cog belt | 1 | 1 | 1 | 1 | |
| C20 | H4713D8001 | Spring plate | 1 | 1 | 1 | 1 | |
| C21 | H4714D8001 | Pin | 1 | 1 | 1 | 1 | |
| C22 | H4715D8001 | Link | 1 | 1 | 1 | 1 | |
| C23 | H007013025 | E-type stop ring | 1 | 1 | 1 | 1 | GB/T896 2.5 |
| C24 | H4716D8001 | Twist spring | 1 | 1 | 1 | 1 | |
| C25 | H4717D8001 | Plate | 1 | 1 | 1 | 1 | |
| C26 | H4718D8001 | Pin | 1 | 1 | 1 | 1 | |
| C27 | H4719D8001 | Plate | 1 | 1 | 1 | 1 | |
| C28 | H4720D8001 | Bushing | 1 | 1 | 1 | 1 | |
| C29 | H4721D8001 | Screw | 1 | 1 | 1 | 1 | SM15/64 (28) ×10.5 |
| C30 | HA104F0654 | Screw | 1 | 1 | 1 | 1 | SM15/64 (28) ×10 |
| C31 | H4722D8001 | Belt pulley (lower) | 1 | 1 | 1 | 1 | |
| C32 | H4723D8001 | Screw | 2 | 2 | 2 | 2 | SM15/64 (28) ×4.5 |

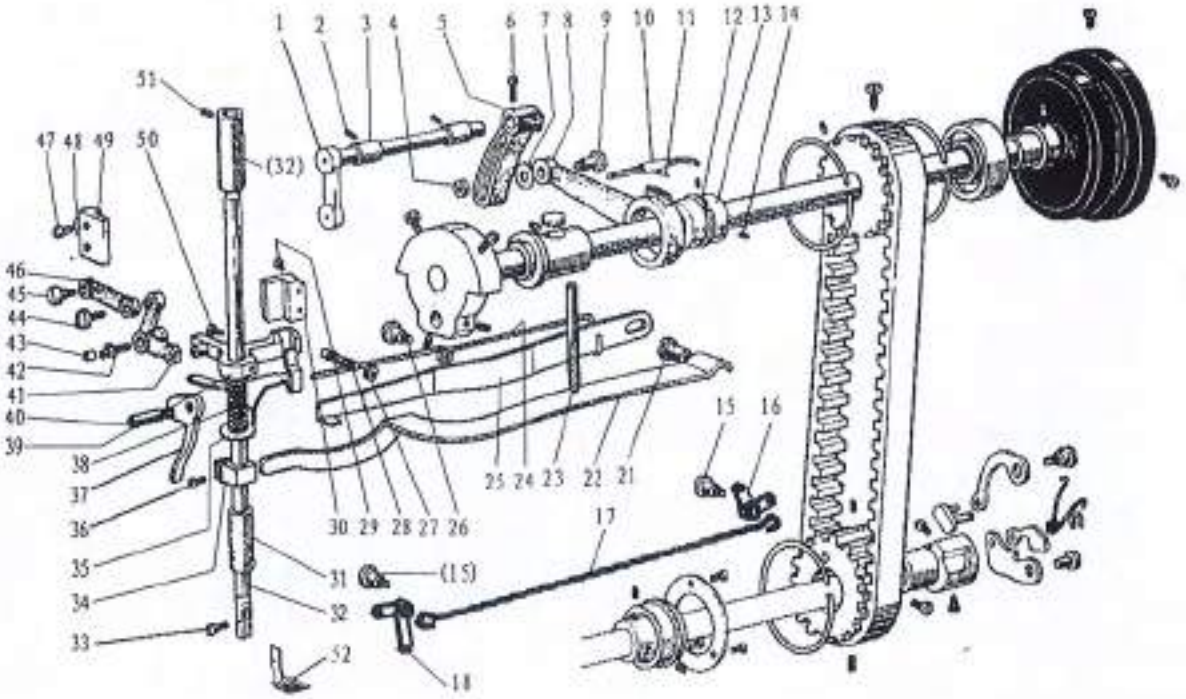
1
2
3
4
5
6
7
8
9
10
11
12
13
14
51
47
48
49
50
(32)
46
45
44
43
42
41
40
39
38
37
36
35
34
33
30
29
28
27
26
25
24
23
22
21
15
16
17
31
(15)
32
52
18

# D.UPPER SHAFT & PRESSER FOOT MECHANISM

| Fig. No. | Part No. | Description | WF925-60 | WF926-60 | WF925-60/AUT | WF926-60/AUT | Remarks |
|---|---|---|---|---|---|---|---|
| D01 | H4705E8001 | Feed lifting rock shaft | 1 | 1 | 1 | 1 | |
| D02 | H4706E8001 | Screw | 2 | 2 | 2 | 2 | SM1/4（24）×7 |
| D03 | H4707E8001 | Bushing | 2 | 2 | 2 | 2 | |
| D04 | HS91165206 | Nut | 1 | 1 | 1 | 1 | M6×0.75 |
| D05 | H4709E8001 | Lever | 1 | 1 | 1 | 1 | |
| D06 | H3115F0671 | Screw | 1 | 1 | 1 | 1 | SM1/4（28）×16 |
| D07 | H2013J0065 | Washer | 1 | 1 | 1 | 1 | |
| D08 | H2014J0066 | Connecting rod | 1 | 1 | 1 | 1 | |
| D09 | H2000J2100 | Bolt | 1 | 1 | 1 | 1 | |
| D10 | H4713E8001 | Oil pipe & wick complete | 1 | 1 | 1 | 1 | |
| D11 | H20111C106 | Spring | 1 | 1 | 1 | 1 | |
| D12 | H007009250 | C-type stop ring | 1 | 1 | 1 | 1 | GB/T894.1 25 |
| D13 | H4714E8001 | Eccentric | 1 | 1 | 1 | 1 | |
| D14 | HA307C0662 | Screw | 2 | 2 | 2 | 2 | SM1/4（40）×6 |
| D15 | H7008E8001 | Screw | 2 | 2 | 2 | 2 | SM1/4（24）×14 |
| D16 | H7009E8001 | Plate（B） | 1 | 1 | 1 | 1 | |
| D17 | H7007E8001 | Plate | 1 | 1 | 1 | 1 | |
| D18 | H7005E8001 | Plate（A） | 1 | 1 | 1 | 1 | |
| D21 | H3100G2170 | Screw | 1 | 1 | 1 | 1 | SM1/4（24）×17 |
| D22 | H4730E8001 | Lever spring | 1 | 1 | 1 | 1 | |
| D23 | H4729E8001 | Screw | 1 | 1 | 1 | 1 | SM15/64（28）×79 |
| D24 | H4727E8001 | Twist spring | 1 | 1 | 1 | 1 | |
| D25 | H4728E8001 | Knee lifting lever | 1 | 1 | 1 | 1 | |
| D26 | H3100G2130 | Screw | 1 | 1 | 1 | 1 | SM1/4（24）×7 |
| D27 | H4726E8001 | Nut | 1 | 1 | 1 | 1 | |
| D28 | H4725E8001 | Screw | 1 | 1 | 1 | 1 | SM1/4（24）×19 |
| D29 | HA111G0683 | Screw | 2 | 2 | 2 | 2 | SM11/64(40)×12 |
| D30 | H4723E8001 | Guide | 1 | 1 | 1 | 1 | |
| D31 | H4744E8001 | Bushing | 1 | 1 | 1 | 1 | |
| D32 | H4754E8001 | Presser bar | 1 | 1 | 1 | 1 | |
| D33 | H3200E2020 | Screw | 1 | 1 | 1 | 1 | SM1/8（44）×9 |
| D34 | H4746E8001 | Spring bracket | 1 | 1 | 1 | 1 | |
| D35 | H4768E8001 | Thread releasing plate | 1 | 1 | | | |
| D36 | H2404I0034 | Screw | | | 1 | 1 | SM9/64(40)×8.5 |
| D37 | H4748E8001 | Lifter lever | 1 | 1 | 1 | 1 | |
| D38 | H4767E8001 | Spring | 1 | 1 | | | |
| D39 | H4752E8001 | Bracket | 1 | 1 | 1 | 1 | |
| D40 | H4749E8001 | Screw | 1 | 1 | 1 | 1 | SM11/64（40）×8.5 |
| D41 | H4715E8001 | Bell crank | 1 | 1 | 1 | 1 | |
| D42 | H2004J0655 | Support shaft | 1 | 1 | 1 | 1 | |
| D43 | H4717E8001 | Roller | 1 | 1 | 1 | 1 | |
| D44 | H4718E8001 | Screw | 1 | 1 | 1 | 1 | SM11/64(32)×6 |
| D45 | H2004J0662 | Screw | 1 | 1 | 1 | 1 | SM1/4(40)×5 |

## D.UPPER SHAFT & PRESSER FOOT MECHANISM

| Fig. No. | Part No. | Description | WF925-60 | WF926-60 | WF925-60/AUT | WF926-60/AUT | Remarks |
|---|---|---|---|---|---|---|---|
| D46 | H4719E8001 | Link | 1 | 1 | 1 | 1 | |
| D47 | HA100E2150 | Screw | 2 | 2 | 2 | 2 | SM11/64(40)×10 |
| D48 | H4722E8001 | Washer | 2 | 2 | 2 | 2 | |
| D49 | H4721E8001 | Bell crank gaide | 1 | 1 | 1 | 1 | |
| D50 | H4753E8001 | Screw | 1 | 1 | 1 | 1 | SM11/64(40)×14.5 |
| D51 | H4708D8001 | Screw | 2 | 2 | 2 | 2 | SM1/4(24)×13 |
| D52 | H4757E8001 | Lifting presser foot | | 1 | | 1 | |
| D52 | H3114G8001 | Lifting presser foot | 1 | | 1 | | |

# E.NEEDLE BAR AND THREAD TAKE-UP MECHANISM

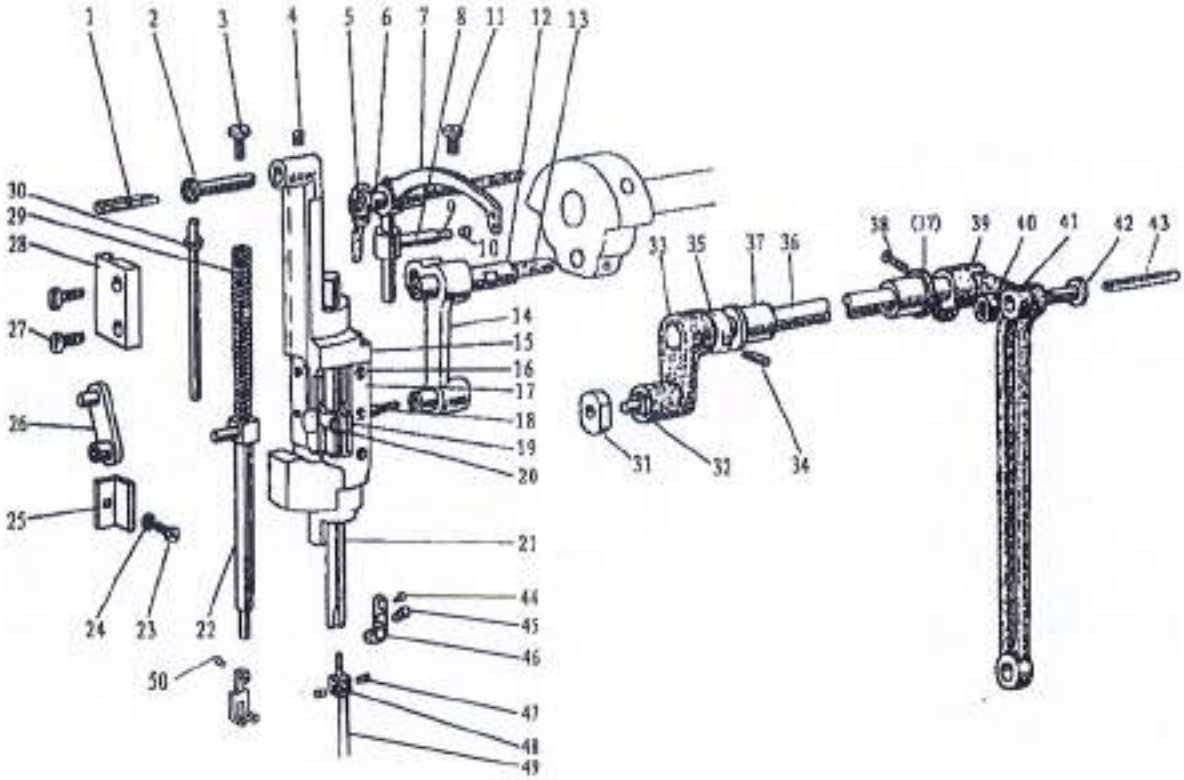

# E.NEEDLE BAR AND THREAD TAKE-UP MECHANISM

| Fig. No. | Part No. | Description | WF925-60 | WF926-60 | WF925-60/AUT | WF926-60/AUT | Remarks |
|---|---|---|---|---|---|---|---|
| E01 | H24211DN05 | Oil wick | 1 | 1 | 1 | 1 | |
| E02 | H4706F8001 | Needle bar guide bracket stud | 1 | 1 | 1 | 1 | |
| E03 | H4707F8001 | Screw | 1 | 1 | 1 | 1 | SM5/16 (28) ×10.4 |
| E04 | HA100C2020 | Screw | 1 | 1 | 1 | 1 | SM15/64 (28) ×10 |
| E05 | H24211DN05 | Oil wick | 1 | 1 | 1 | 1 | |
| E06 | H24211DM05 | Thread take-up lever support stud | 1 | 1 | 1 | 1 | |
| E07 | H4712F8001 | Thread take-up lever | 1 | 1 | 1 | 1 | |
| E08 | H2405D1112 | Thread take-up slide brock | 1 | 1 | 1 | 1 | |
| E09 | H24211D405 | Oil wick | 1 | 1 | 1 | 1 | |
| E10 | H24211D305 | Plug | 1 | 1 | 1 | 1 | |
| E11 | HA110D0672 | Screw | 1 | 1 | 1 | 1 | SM15/64 (28) ×12 |
| E12 | H2405D0662 | Needle bar crank pin | 1 | 1 | 1 | 1 | |
| E13 | H4716F8001 | Oil wick | 1 | 1 | 1 | 1 | |
| E14 | H4717F8001 | Connecting link | 1 | 1 | 1 | 1 | |
| E15 | H4719F8001 | Needle bar guide bracket | 1 | 1 | 1 | 1 | |
| E16 | H32111D304 | Screw | 6 | 6 | 6 | 6 | SM3/32 (56) ×4 |
| E17 | H4721F8001 | Spacer | 2 | 2 | 2 | 2 | |
| E18 | H3204D6513 | Felt | 1 | 1 | 1 | 1 | |
| E19 | H4722F8001 | Needle bar holder | 1 | 1 | 1 | 1 | |
| E20 | H32111D604 | Screw | 1 | 1 | 1 | 1 | SM9/64 (40) ×8.5 |
| E21 | H4724F8001 | Needle bar | | 1 | | 1 | |
| E21 | H4806F8001 | Needle bar | 1 | | 1 | | |
| E22 | H4725F8001 | Vibrating presser bar | 1 | 1 | 1 | 1 | |
| E23 | H3400C2020 | Screw | 1 | 1 | 1 | 1 | |
| E24 | H32002030 | Washer | 1 | 1 | 1 | 1 | |
| E25 | H3400C2010 | Needle bar guide | 1 | 1 | 1 | 1 | |
| E26 | H4726F8001 | Vibrating presser bar link | 1 | 1 | 1 | 1 | |
| E27 | H4753E8001 | Screw | 2 | 2 | 2 | 2 | SM11/64 (40) ×17.5 |
| E28 | H4728F8001 | Vibrating presser bar guide | 1 | 1 | 1 | 1 | |
| E29 | H4729F8001 | Spring | 1 | 1 | 1 | 1 | |
| E30 | H4730F8001 | Vibrating presser spring guide | 1 | 1 | 1 | 1 | |
| E31 | H3410C301P | Square block | 1 | 1 | 1 | 1 | |
| E32 | H3406C0671 | Crank pin | 1 | 1 | 1 | 1 | SM15/64(28)×10 |
| E33 | H3406C0672 | Needle bar vibrating crank (left) | 1 | 1 | 1 | 1 | |
| E34 | H602040240 | Taper | 1 | 1 | 1 | 1 | GB/T117 4×24 |
| E35 | H4734F8001 | Collar | 1 | 1 | 1 | 1 | |
| E36 | H7004F8001 | Needle bar vibrating shaft | 1 | 1 | 1 | 1 | |
| E37 | H3204B0652 | Needle bar vibrating shaft bushing | 2 | 2 | 2 | 2 | |
| E38 | H2012N0652 | Screw | 1 | 1 | 1 | 1 | SM1/4 (24) ×16 |
| E39 | H3407C0661 | Needle bar vibrating crank (right) | 1 | 1 | 1 | 1 | |
| E40 | H32311D506 | Nut | 1 | 1 | 1 | 1 | |
| E41 | H3407C0662 | Connecting link | 1 | 1 | 1 | 1 | |
| E42 | H32311D306 | Screw | 1 | 1 | 1 | 1 | SM5/16 (24) |

# E.NEEDLE BAR AND THREAD TAKE-UP MECHANISM

| Fig. No. | Part No. | Description | WF925-60 | WF926-60 | WF925-60/AUT | WF926-60/AUT | Remarks |
|---|---|---|---|---|---|---|---|
| E43 | H32311D406 | Oil wick | 1 | 1 | 1 | 1 | |
| E44 | H3129F0691 | Screw | 1 | | 1 | | SM3/32(56)×2.5 |
| E45 | HA100C2170 | Screw | 1 | | 1 | | SM1/8(44)×4.5 |
| E46 | H3129F0693 | Thread guide | 1 | | 1 | | |
| E47 | H32132D104 | Screw | | 2 | | 2 | SM9/64(40)×3 |
| E48 | H4739F8001 | Needle clamp(1//4) | | 1 | | 1 | |
| E49 | H4740F8001 | Needle | 1 | 2 | 1 | 2 | |
| E50 | HA700F2100 | Screw | 1 | 1 | 1 | 1 | SM11/64(40)×7 |

# F.STITCH REGULATOR MECHANISM

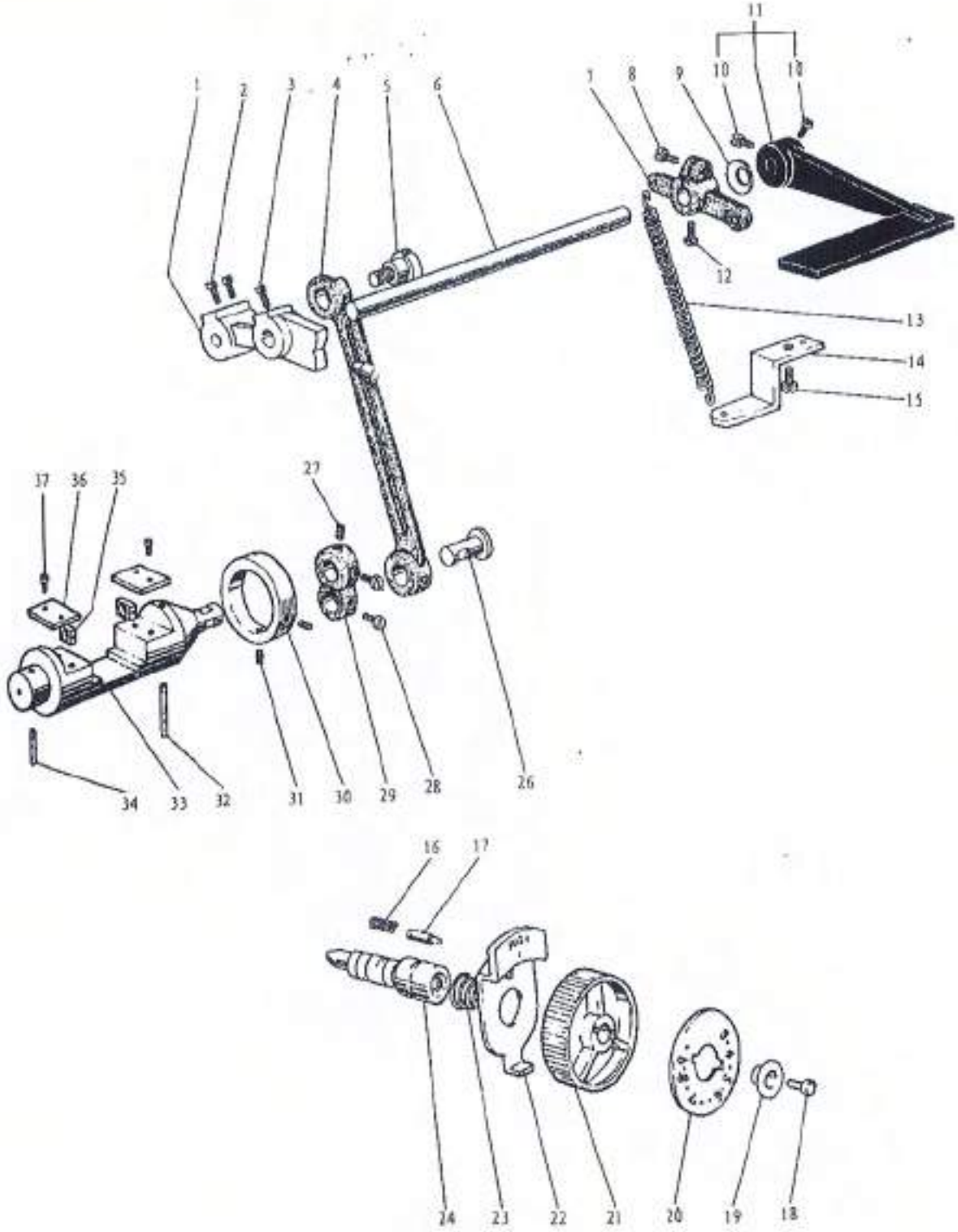

# F.STITCH REGULATOR MECHANISM

| Fig. No. | Part No. | Description | WF925-60 | WF926-60 | WF925-60/AUT | WF926-60/AUT | Remarks |
|---|---|---|---|---|---|---|---|
| F01 | H4706G8001 | Feed regulator cam | 1 | 1 | 1 | 1 | |
| F02 | HA113F0684 | Screw | 2 | 2 | 2 | 2 | SM15/64（28）×8.5 |
| F03 | H3200F2020 | Screw | 1 | 1 | 1 | 1 | SM15/64（28）×12 |
| F04 | H4707G8001 | Link | 1 | 1 | 1 | 1 | |
| F05 | HA100G2070 | Eccentric shaft | 1 | 1 | 1 | 1 | |
| F06 | H4709G8001 | Reverse stitch shaft (upper) | 1 | 1 | | | |
| F06 | H4909G8001 | Reverse stitch shaft (upper) | | | 1 | 1 | |
| F07 | H3207F0671 | Arm | 1 | 1 | | | |
| F07 | H4905G8001 | Arm | | | 1 | 1 | |
| F08 | HA800F2020 | Screw | 1 | 1 | 1 | 1 | |
| F09 | HA100F2110 | Spring Washer | 1 | 1 | | | |
| F10 | HA113F0684 | Screw | 2 | 2 | | | |
| F11 | H4711G8001 | Reverse sewing lever | 1 | 1 | | | |
| F11 | H4906G8001 | Reverse sewing lever | | | 1 | 1 | |
| F12 | H3207F0672 | Screw | 1 | 1 | 1 | 1 | SM11/64（40）×8.5 |
| F13 | H4710G8001 | Spring | 1 | 1 | 1 | 1 | |
| F14 | H3200F2050 | Guide plate | 1 | 1 | | | |
| F15 | HA300C2030 | Screw | 1 | 1 | | | SM11/64（40）×8 |
| F16 | H3200F2110 | Spring | 1 | 1 | 1 | 1 | |
| F17 | HA700F2030 | Pin | 1 | 1 | 1 | 1 | |
| F18 | HA720F0686 | Screw | 1 | 1 | 1 | 1 | SM3/16(28)×18 |
| F19 | HA720F0685 | Bushing | 1 | 1 | 1 | 1 | |
| F20 | H4910G8001 | Stitch length indicating plate | 1 | 1 | 1 | 1 | |
| F21 | HA7421F120 | Dial | 1 | 1 | 1 | 1 | |
| F22 | HA720F0683 | Stopper pin releasing lever | 1 | 1 | 1 | 1 | |
| F23 | HA720F0687 | Coil spring | 1 | 1 | 1 | 1 | |
| F24 | HA109F0671 | Screw bar | 1 | 1 | 1 | 1 | |
| F26 | H3206F0662 | Pin | 1 | 1 | 1 | 1 | |
| F27 | H415050200 | Screw | 1 | 1 | 1 | 1 | GB/T70.1 M5×20 |
| F28 | H428050060 | Screw | 2 | 2 | 2 | 2 | GB/T77 M5×6 |
| F29 | H4714G8001 | Reverse sewing crank | 1 | 1 | 1 | 1 | |
| F30 | H4715G7101 | Collar | 1 | 1 | 1 | 1 | |
| F31 | HA3411D308 | Screw | 2 | 2 | 2 | 2 | SM15/64（28）×7 |
| F32 | H4719G8001 | Felt | 1 | 1 | 1 | 1 | |
| F33 | H4720G8001 | Rverse block | 1 | 1 | 1 | 1 | |
| F34 | H4721G8001 | Felt | 1 | 1 | 1 | 1 | |
| F35 | H4722G8001 | Square block | 2 | 2 | 2 | 2 | |
| F36 | H4723G8001 | Guide plate | 2 | 2 | 2 | 2 | |
| F37 | HA300C2030 | Screw | 4 | 4 | 4 | 4 | SM11/64（40）×8 |

# G.LOWER SHAFT & FEED ROCK SHAFT MECHANISM

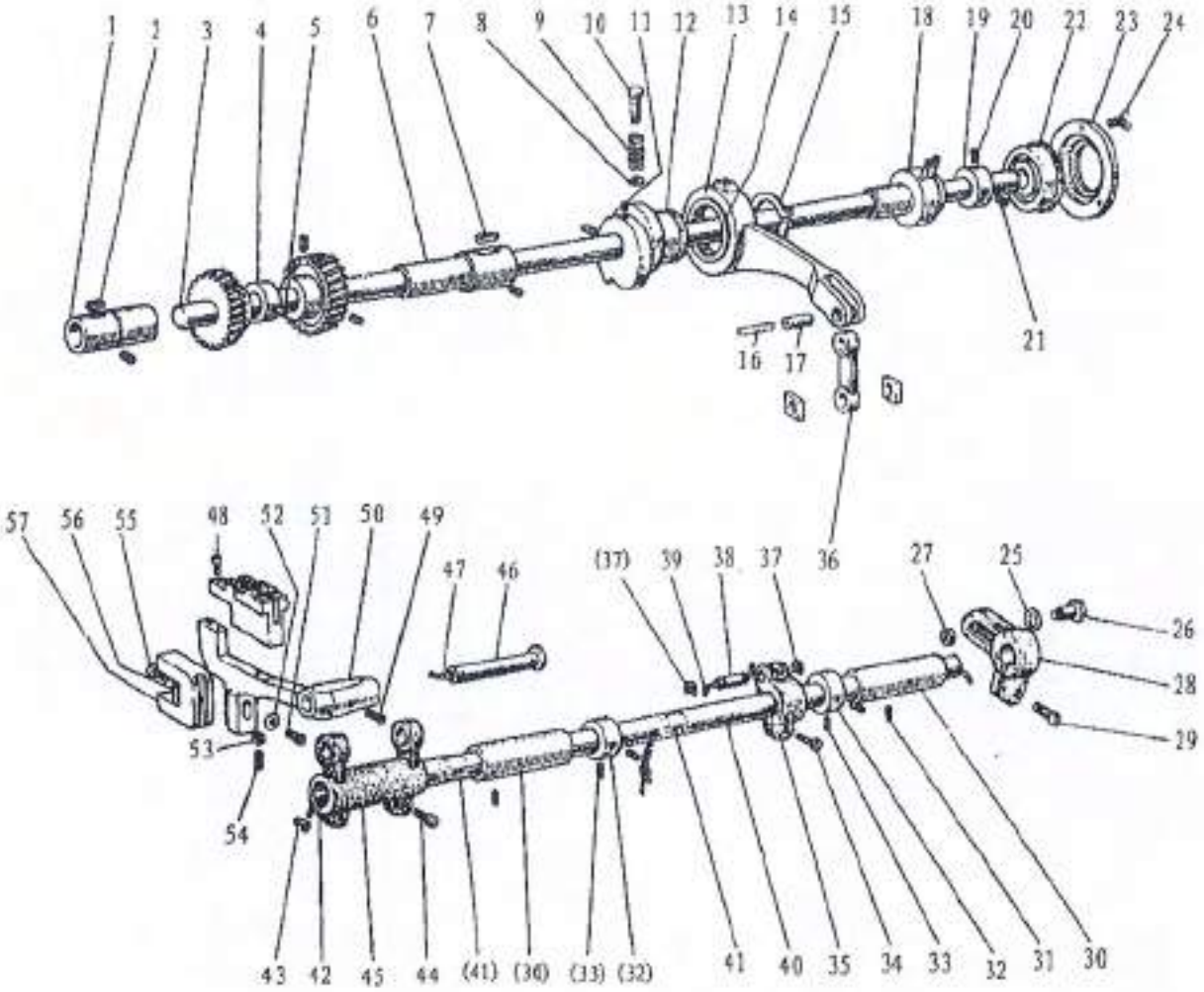

# G.LOWER SHAFT & FEED ROCK SHAFT MECHANISM

| Fig. No. | Part No. | Description | WF925-60 | WF926-60 | WF925-60/AUT | WF926-60/AUT | Remarks |
|---|---|---|---|---|---|---|---|
| G44 | HA104G0012 | Screw | 2 | 2 | 2 | 2 | SM3/16（28）×12 |
| G45 | H4905H8001 | Feed connection crank (left) | | | 1 | 1 | |
| G45 | H3205G1032 | Feed connection crank (left) | 1 | 1 | | | |
| G46 | H32243G205 | Feed bar shaft | 1 | 1 | 1 | 1 | |
| G47 | H3205G0662 | Oil wick | 1 | 1 | 1 | 1 | |
| G48 | H32211G205 | Bolt | 2 | 2 | 2 | 2 | SM1/8（40）×7 |
| G49 | H429050050 | Bolt | 1 | 1 | 1 | 1 | GB/T78 M5×5 |
| G50 | H4742H8001 | Feed bar | | 1 | | | |
| G50 | H4805H8001 | Feed bar | 1 | | 1 | | |
| G50 | H4942H8001 | Feed bar | | | | 1 | |
| G51 | H3200H2040 | Screw | 1 | 1 | 1 | 1 | SM15/64（28）×17 |
| G52 | H2013J0065 | Washer | 1 | 1 | 1 | 1 | |
| G53 | H003002030 | Nut | | 1 | | 1 | GB/T6170 M3 |
| G54 | H429030140 | Screw | | 1 | | 1 | GB/T78 M3×14 |
| G55 | H3205H0653 | Screw | 1 | 1 | 1 | 1 | SM1/8（44）×4 |
| G56 | H3205H0652 | Felt | 1 | 1 | 1 | 1 | |
| G57 | H4743H8001 | Feed bar forked connection | 1 | 1 | 1 | 1 | |

# G.LOWER SHAFT & FEED ROCK SHAFT MECHANISM

| Fig. No. | Part No. | Description | WF925-60 | WF926-60 | WF925-60/AUT | WF926-60/AUT | Remarks |
|---|---|---|---|---|---|---|---|
| G01 | H4706H8001 | Lower shaft bushing (left) | 1 | 1 | 1 | 1 | |
| G02 | H4707H8001 | Oil wick | 1 | 1 | 1 | 1 | |
| G03 | H7004H8001 | Lower shaft | 1 | 1 | 1 | 1 | |
| G04 | H4710H8001 | Feed eccentric cam | 1 | 1 | 1 | 1 | |
| G05 | H3205H0654 | Screw | 1 | 1 | 1 | 1 | SM1/4(40)×5 |
| G06 | H4712H8001 | Lower shaft bushing (right) | 1 | 1 | 1 | 1 | |
| G07 | H4713H8001 | Oil wick | 1 | 1 | 1 | 1 | |
| G08 | H007013050 | Stop ring | 2 | 2 | 2 | 2 | GB/T896 5 |
| G09 | H4714H8001 | Spring | 1 | 1 | 1 | 1 | |
| G10 | H4715H8001 | Push button | 1 | 1 | 1 | 1 | |
| G11 | H2405D0664 | Screw | 2 | 2 | 2 | 2 | SM15/64(28)×14 |
| G12 | H4717H8001 | Feed eccentric | 1 | 1 | 1 | 1 | |
| G13 | H4718H8001 | Feed connecting rod | 1 | 1 | 1 | 1 | |
| G14 | H4719H8001 | Needle bearing | 1 | 1 | 1 | 1 | |
| G15 | H007009260 | C-type stop ring | 1 | 1 | 1 | 1 | GB/T894.1 26 |
| G16 | H4720H8001 | Oil wick | 1 | 1 | 1 | 1 | |
| G17 | H4721H8001 | Shaft | 1 | 1 | 1 | 1 | |
| G18 | H7006H7101 | Lower shaft bushing complete (middle) | 1 | 1 | 1 | 1 | |
| G19 | H4725H8001 | Bushing | 1 | 1 | 1 | 1 | |
| G20 | HA105D0662 | Screw | 1 | 1 | 1 | 1 | SM1/4（40）×4 |
| G21 | H3205H0654 | Screw | 1 | 1 | 1 | 1 | SM1/4（40）×5 |
| G22 | H4723H8001 | Ball bearing | 1 | 1 | 1 | 1 | |
| G23 | H4727H8001 | Bearing holder | 1 | 1 | 1 | 1 | |
| G24 | HA7311C306 | Screw | 3 | 3 | 3 | 3 | SM9/64（40）×7 |
| G25 | H4728H8001 | Washer | 1 | 1 | 1 | 1 | |
| G26 | H4729H8001 | Screw | 1 | 1 | 1 | 1 | M6 |
| G27 | HS91165206 | Nut | 1 | 1 | 1 | 1 | GB52008 M6 |
| G28 | H4731H8001 | Feed connection crank (right) | 1 | 1 | 1 | 1 | |
| G29 | H2012N0652 | Screw | 1 | 1 | 1 | 1 | SM1/4（24）×16 |
| G30 | HA100G2120 | Feed rock shaft bushing | 2 | 2 | 2 | 2 | |
| G31 | H4708D8001 | Screw | 2 | 2 | 2 | 2 | SM1/4（24）×13 |
| G32 | HA108G0661 | Collar | 2 | 2 | 2 | 2 | |
| G33 | HA105D0662 | Screw | 4 | 4 | 4 | 4 | SM1/4（40）×4 |
| G34 | H2012N0652 | Screw | 1 | 1 | 1 | 1 | SM1/4(24)×16 |
| G35 | H4736H8001 | Feed connection crank (middle) | 1 | 1 | 1 | 1 | |
| G36 | H4737H8001 | Link | 1 | 1 | 1 | 1 | |
| G37 | H007013050 | E-type stop ring | 2 | 2 | 2 | 2 | GB/T896 5 |
| G38 | H4738H8001 | Pin | 1 | 1 | 1 | 1 | |
| G39 | H4739H8001 | Oil wick | 1 | 1 | 1 | 1 | |
| G40 | H7005H8001 | Feed rock shaft | 1 | 1 | 1 | 1 | |
| G41 | H4740H8001 | Felt | 2 | 2 | 2 | 2 | |
| G42 | H3204G0031 | Oil wick | 1 | 1 | 1 | 1 | |
| G43 | H3200G2030 | Clip | 1 | 1 | 1 | 1 | |

# H.HOOK SADDLE MECHANISM

WF925-60

WF926-60

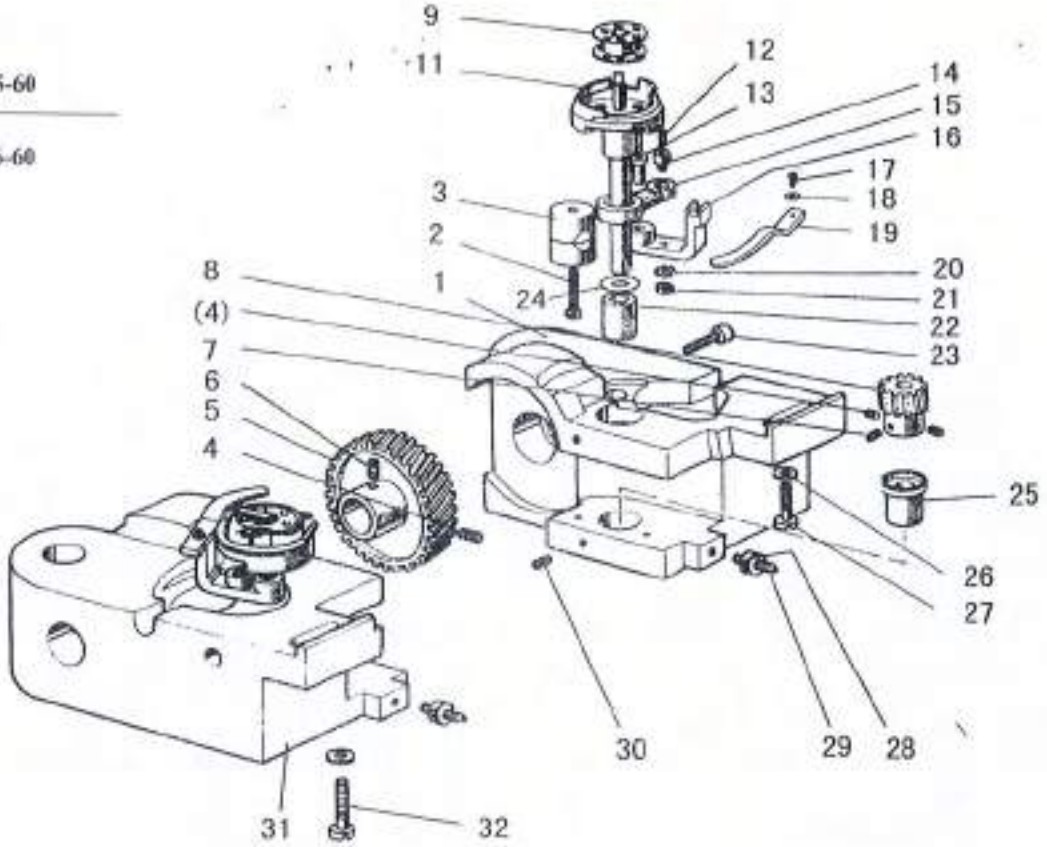


WF925-60/AUT

WF926-60/AUT

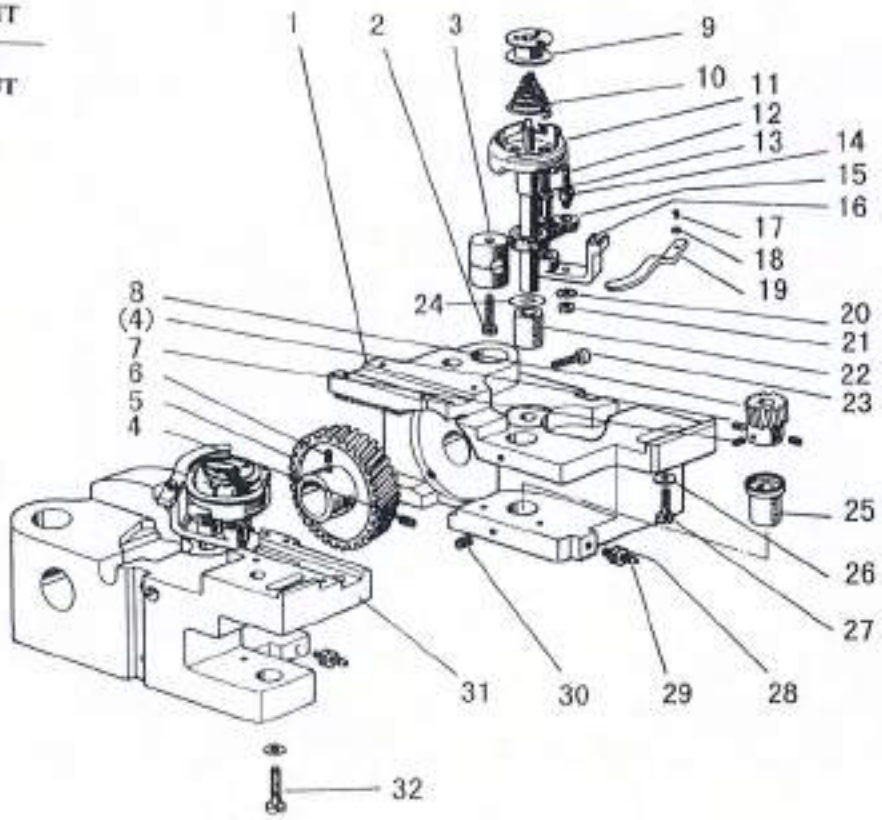

# H.HOOK SADDLE MECHANISM

| Fig. No. | Part No. | Description | WF925-60 | WF926-60 | WF925-60/AUT | WF926-60/AUT | Remarks |
|---|---|---|---|---|---|---|---|
| H01 | H7005I8001 | Hook saddle (right) | 1 | 1 | | | |
| H01 | H4906I8001 | Hook saddle (right) | | | 1 | 1 | |
| H02 | H3207I0661 | Screw | 1 | 2 | 1 | 2 | SM15/64 (28) ×22 |
| H03 | H3207I0662 | Bushing | 1 | 2 | 1 | 2 | |
| H04 | H4707I8001 | Screw | 3 | 6 | 3 | 6 | SM1/4 (40) ×4 |
| H05 | H4706I8001 | Hook driving gear (large) | 1 | 2 | 1 | 2 | |
| H06 | H4708I8001 | Screw | 1 | 2 | 1 | 2 | SM1/4 (40) ×6.5 |
| H07 | H4709I8001 | Screw | 1 | 2 | 1 | 2 | SM1/4 (40) ×5 |
| H08 | H4705I8001 | Hook driving gear (small) | 1 | 2 | 1 | 2 | |
| H09 | H3306I0067 | Bobbin | 1 | 2 | | | |
| H09 | H4912I8001 | Bobbin | | | 1 | 2 | BO-B872(A) |
| H10 | H4922I8001 | Spring | | | 1 | 2 | |
| H11 | H4908I7101 | Hook complete | | | 1 | 2 | |
| H11 | H4708I7101 | Hook complete | 1 | 2 | | | |
| H12 | H3204I0656 | Oil wick | 2 | 4 | 2 | 4 | |
| H13 | H3215I1504 | Opener bracket shaft | 1 | 2 | 1 | 2 | |
| H14 | H3215I1204 | Screw | 1 | 2 | 1 | 2 | SM3/16 (32) ×7.8 |
| H15 | H3313I1204 | Link | 1 | 2 | 1 | 2 | |
| H16 | H3313I1104 | Opener bracket | 1 | 2 | 1 | 2 | |
| H17 | H2004J0067 | Screw | 1 | 2 | 1 | 2 | |
| H18 | H3200I2030 | Washer | 1 | 2 | 1 | 2 | |
| H19 | H3305I0066 | Opener | 1 | 2 | 1 | 2 | |
| H20 | H005008050 | Spring washer | 1 | 2 | 1 | 2 | |
| H21 | HA104G0658 | Nut | 1 | 2 | 1 | 2 | |
| H22 | H7006I8001 | Hook shaft bushing (upper) | 1 | 2 | | | |
| H22 | H4909I8001 | Hook shaft bushing (upper) | | | 1 | 2 | |
| H23 | H3204I0657 | Screw | 1 | 2 | 1 | 2 | SM3/16 (28) ×14.5 |
| H24 | H3312I1204 | Washer | 1 | 2 | | | |
| H24 | H4910I8001 | Washer | | | 1 | 2 | |
| H25 | H3204I0653 | Hook shaft bushing (lower) | 1 | 2 | | | |
| H25 | H4911I8001 | Hook shaft bushing (lower) | | | 1 | 2 | |
| H26 | H2013J0065 | Washer | 1 | 2 | 1 | 2 | |
| H27 | H3200I2050 | Screw | 1 | 1 | 1 | 1 | SM1/4 (24) ×23 |
| H28 | H3204I0659 | Nut | 1 | 2 | | | |
| H28 | H4914I8001 | Nut | | | 1 | 2 | |
| H29 | H3204I0658 | Screw | 1 | 2 | | | |
| H29 | H4915I8001 | Screw | | | 1 | 2 | |
| H30 | HA305E0662 | Screw | | | 2 | 4 | |
| H31 | H4917I8001 | Hook saddle (left) | | | | 1 | |
| H31 | H7004I8001 | Hook saddle (left) | | 1 | | | |
| H32 | H3200I2050 | Screw | 1 | 2 | | | SM1/4 (24) ×23 |
| H32 | H4913I8001 | Screw | | | 1 | 2 | SM1/4 (24) ×30 |

# I.THREAD TRIMMER MECHANISM

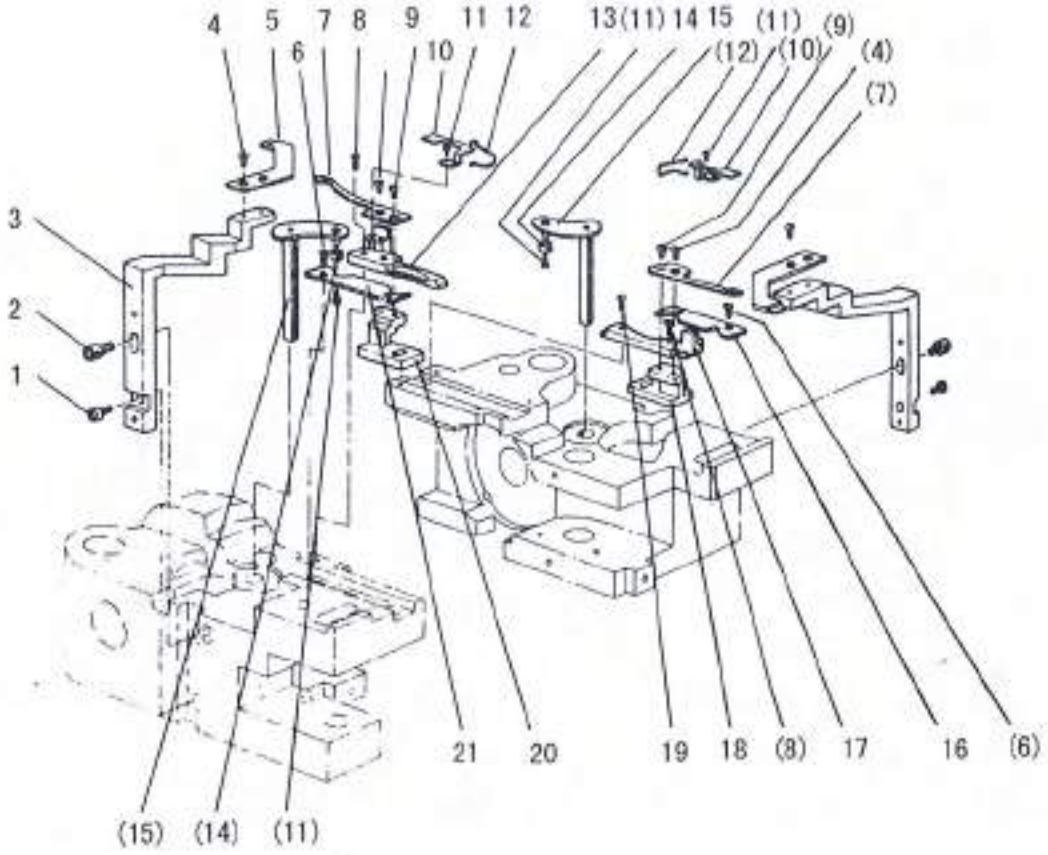

# I.THREAD TRIMMER MECHANISM

| Fig. No. | Part No. | Description | WF925-60 | WF926-60 | WF925-60/AUT | WF926-60/AUT | Remarks |
|---|---|---|---|---|---|---|---|
| I01 | H4905J8001 | Screw | | | 1 | 2 | |
| I02 | H4906J8001 | Bolt | | | 1 | 2 | SM11/64 (40) ×12 |
| I03 | H4907J8001 | Trimming knife holder | | | 1 | 2 | |
| I04 | H4908J8001 | Screw | | | 3 | 6 | SM9/64 (40) ×4 |
| I05 | H4909J8001 | Fixed blade | | | 1 | 2 | |
| I06 | H4914B8001 | Screw | | | 2 | 4 | SM9/64 (40) ×4 |
| I07 | H4911J8001 | Moved knife | | | 1 | 2 | |
| I08 | H4912J8001 | Screw | | | 1 | 2 | SM1/8 (44) ×9.2 |
| I09 | H4913J8001 | Screw | | | 1 | 2 | SM9/64 (40) ×4.5 |
| I10 | H4914J8001 | Spring plate | | | 1 | 2 | |
| I11 | H4915J8001 | Screw | | | 3 | 6 | SM3/32 (56) ×3.8 |
| I12 | H4916J8001 | Reversing spring | | | 1 | 2 | |
| I13 | H4917J8001 | Guide | | | 1 | 1 | |
| I14 | H4920J8001 | Roller | | | 1 | 2 | |
| I15 | H4921J8001 | Lever | | | 1 | 2 | |
| I16 | H4922J8001 | Cover | | | 1 | 1 | |
| I17 | H4923J8001 | Guide (right) | | | 1 | 1 | |
| I18 | H4924J8001 | Knife pad (right) | | | 1 | 1 | |
| I19 | H4925J8001 | Screw | | | 1 | 1 | SM9/64 (40) ×9.5 |
| I20 | H4926J8001 | Knife pad (left) | | | 1 | 1 | |
| I21 | H4927J8001 | Cover | | | 1 | 1 | |

# J.THREAD TRIMMER MECHANISM

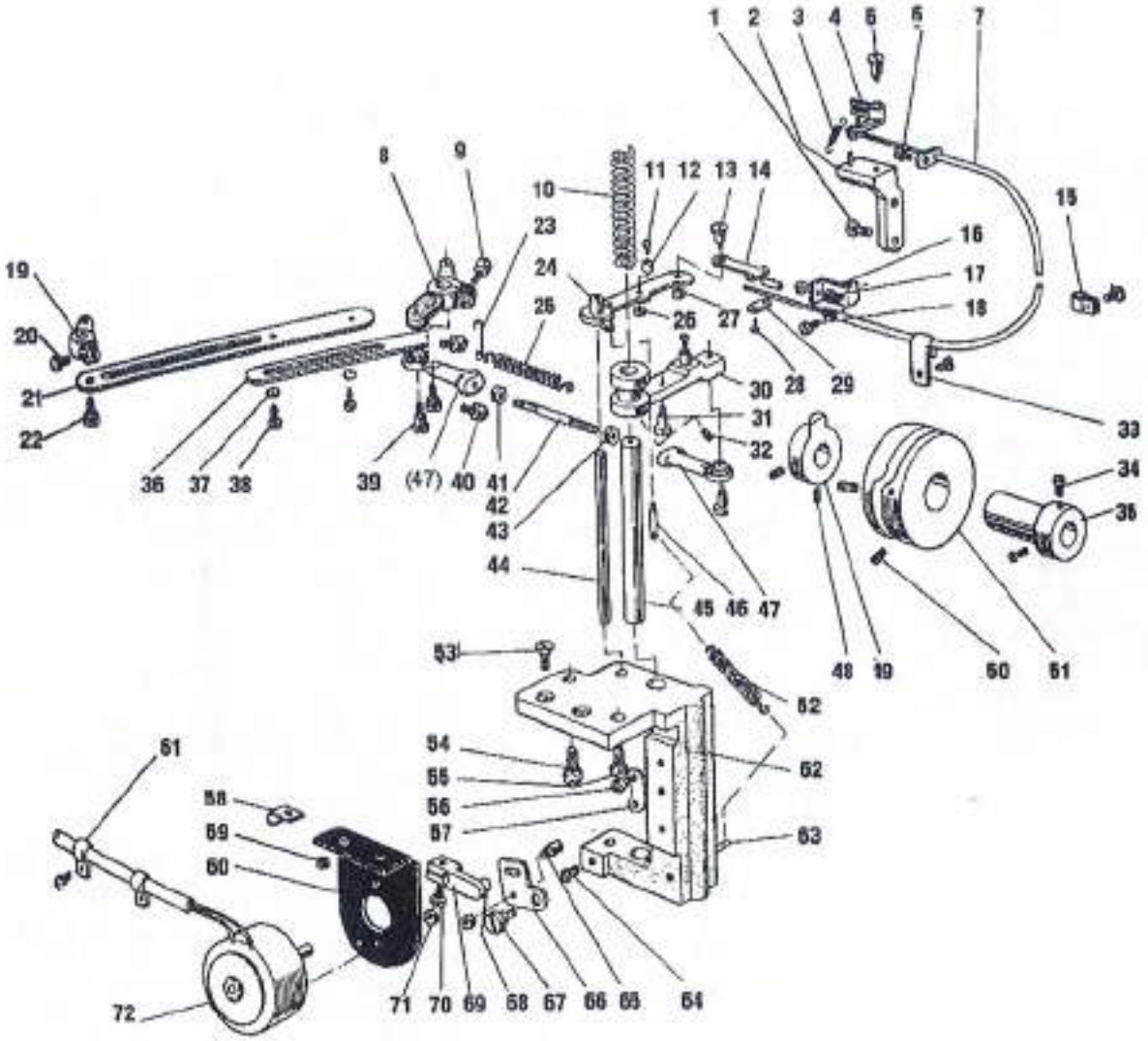

# J.THREAD TRIMMER MECHANISM

| Fig. No. | Part No. | Description | WF925-60 | WF926-60 | WF925-60/AUT | WF926-60/AUT | Remarks |
|---|---|---|---|---|---|---|---|
| J01 | HA300C2020 | Screw | | | 2 | 2 | SM11/64 (40) ×8 |
| J02 | H4915K7101 | Thread releading bracket | | | 1 | 1 | |
| J03 | H4918K8001 | Spring | | | 1 | 1 | |
| J04 | H4919K7101 | Thread releading plate | | | 1 | 1 | |
| J05 | H2400I2040 | Screw | | | 1 | 1 | SM11/64 (40) ×5 |
| J06 | HA300B2170 | Screw | | | 4 | 4 | SM11/64 (40) ×8 |
| J07 | H0604K7101 | Flexible wire complete | | | 1 | 1 | |
| J08 | H4912K8001 | Arm | | | 1 | 1 | |
| J09 | H4913K8001 | Bolt | | | 1 | 1 | SM15/64 (28) ×12.5 |
| J10 | H4945K8001 | Spring | | | 1 | 1 | |
| J11 | H4950K8001 | Screw | | | 1 | 1 | SM11/64 (40) ×3.6 |
| J12 | H4949K8001 | Roller | | | 1 | 1 | |
| J13 | H4952K8001 | Screw | | | 1 | 1 | SM3/16 (28) ×5 |
| J14 | H4953K8001 | Mounting plate | | | 1 | 1 | |
| J15 | HA700Q0030 | Nylon clip | | | 1 | 1 | |
| J16 | H4925K8001 | Mounting plate | | | 1 | 1 | |
| J17 | H003002050 | Nut | | | 2 | 2 | GB/T6170 M5 |
| J18 | HA300C2030 | Screw | | | 1 | 1 | SM11/64 (40) ×7 |
| J19 | H4908K8001 | Arm | | | | 1 | |
| J20 | H4907K8001 | Bolt | | | | 1 | SM15/64 (28) ×12.5 |
| J21 | H4906K8001 | Link | | | | 1 | |
| J22 | H4905K8001 | Screw | | | 2 | 2 | M5 (0.5) ×7.5 |
| J23 | HA100H2080 | Pin type | | | 1 | 1 | |
| J24 | H4946K7101 | Thread releasing lever | | | 1 | 1 | |
| J25 | H4943K8001 | Spring | | | 1 | 1 | |
| J26 | H4951K8001 | Nut | | | 1 | 1 | SM11/64 (40) |
| J27 | H4954K8001 | Nut | | | 1 | 1 | SM3/16 (28) |
| J28 | H4956K8001 | Screw | | | 2 | 2 | SM1/8 (44) ×7 |
| J29 | H4955K8001 | Bushing | | | 1 | 1 | |
| J30 | H4957K7101 | Vibrating crank | | | 1 | 1 | |
| J31 | H4944K8001 | Screw | | | 1 | 1 | SM11/64 (40) ×5.5 |
| J32 | H4962K8001 | Screw | | | 2 | 2 | M5×5 |
| J33 | HA708P0668 | Nylon clip | | | 1 | 1 | |
| J34 | HA113F0684 | Screw | | | 2 | 2 | SM15/64 (28) ×8.5 |
| J35 | H4931K8001 | Bushing | | | 1 | 1 | |
| J36 | H4909K8001 | Link | | | | 1 | |
| J37 | H005001050 | Washer | | | | 1 | GB/T97.1 5 |
| J38 | H4911K8001 | Bolt | | | | 2 | |
| J39 | H4936K8001 | Screw | | | 2 | 2 | M5 (0.5) ×8.5 |
| J40 | H4987K8001 | Bolt | | | 1 | 1 | |
| J41 | H4940K8001 | Nut (left) | | | 1 | 1 | M5 |
| J42 | H4939K8001 | Bolt | | | 1 | 1 | |
| J43 | H003002050 | Nut (right) | | | 1 | 1 | GB/T6170 M5 |

## J.THREAD TRIMMER MECHANISM

| Fig. No. | Part No. | Description | WF925-60 | WF926-60 | WF925-60/AUT | WF926-60/AUT | Remarks |
|---|---|---|---|---|---|---|---|
| J44 | H4964K8001 | Shaft | | | 1 | 1 | |
| J45 | H4963K8001 | Shaft | | | 1 | 1 | |
| J46 | H4985K8001 | Screw | | | 1 | 1 | SM11/64 (40) ×4 |
| J47 | H3405D0663 | Ball joint (right) | | | 2 | 2 | |
| J48 | H3205G1114 | Screw | | | 4 | 4 | M4×4 |
| J49 | H4934K8001 | Cam | | | 1 | 1 | |
| J50 | HA710E0692 | Screw | | | 2 | 2 | SM1/4 (40) ×9.5 |
| J51 | H4932K8001 | Cam | | | 1 | 1 | |
| J52 | H4986K8001 | Spring | | | 1 | 1 | |
| J53 | H411050160 | Screw | | | 2 | 2 | GB/T819.1 M5×16 |
| J54 | H2012N0652 | Screw | | | 1 | 1 | SM1/4 (24) ×16 |
| J55 | H4983K8001 | Screw | | | 1 | 1 | SM1/4 (24) ×13 |
| J56 | H4967K8001 | Screw | | | 3 | 3 | SM11/64 (40) ×7 |
| J57 | H4966K8001 | Stopper | | | 1 | 1 | |
| J58 | H4981K8001 | Holder | | | 1 | 1 | |
| J59 | H003008050 | Nut | | | 2 | 2 | GB/T6172.1 M5 |
| J60 | H4977K8001 | Mounting plate | | | 1 | 1 | |
| J61 | H4980K8001 | Holder | | | 2 | 2 | |
| J62 | H4965K8001 | Set plate | | | 1 | 1 | |
| J63 | H3700E2080 | Pin type | | | 1 | 1 | |
| J64 | H4969K8001 | Screw | | | 1 | 1 | SM11/64 (40) ×8.5 |
| J65 | H4970K8001 | Screw | | | 1 | 1 | SM11/64 (40) ×6 |
| J66 | H4971K8001 | Lever | | | 1 | 1 | |
| J67 | H4972K8001 | Screw | | | 1 | 1 | SM11/64 (40) ×6.8 |
| J68 | H4973K8001 | Pin | | | 1 | 1 | |
| J69 | H4974K8001 | Arm | | | 1 | 1 | |
| J70 | HA111G0683 | Screw | | | 1 | 1 | SM11/64 (40) ×12 |
| J71 | HA7111N304 | Nut | | | 1 | 1 | SM11/64 (40) |
| J72 | H4979K8004 | Solenoid complete | | | 1 | 1 | |

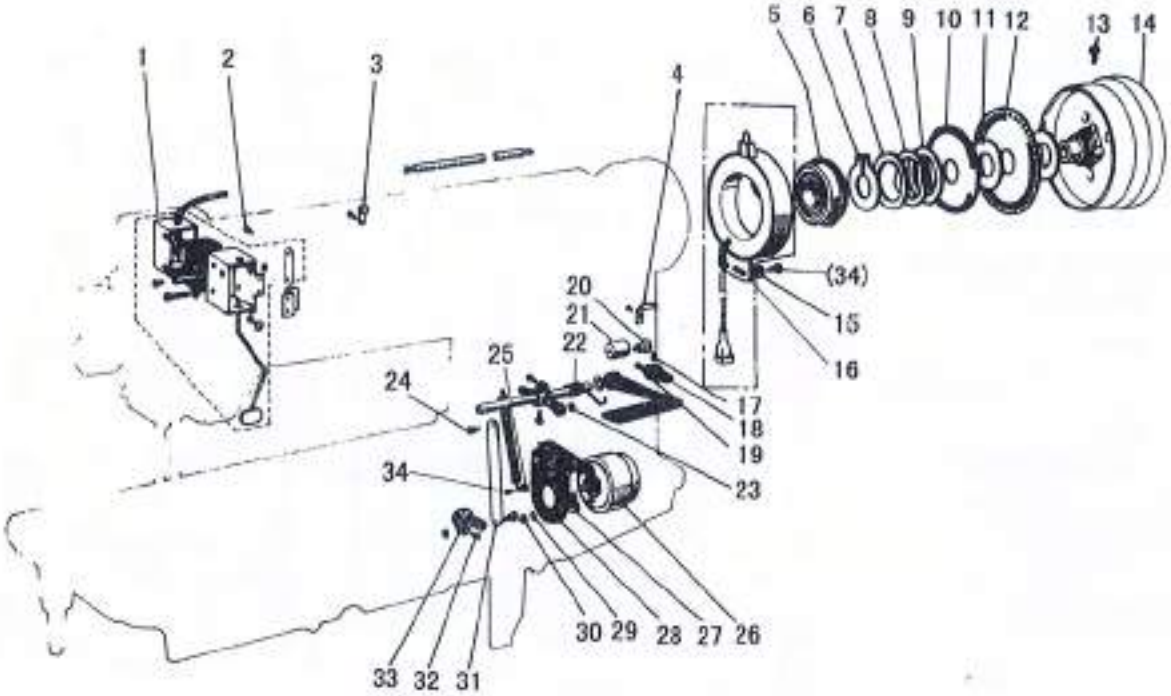
1
2
3
4
5
6
7
8
9
10
11
12
13
14
(34)
15
16
17
18
19
20
21
22
23
24
25
26
27
28
29
30
31
32
33
34

# K.TOUCH BACK AND DETECTOR MECHANISM

| Fig. No. | Part No. | Description | WF925-60 | WF926-60 | WF925-60/AUT | WF926-60/AUT | Remarks |
|---|---|---|---|---|---|---|---|
| K01 | H4905L7101 | Touth switch complete | | | 1 | 1 | |
| K02 | H4918L8001 | Screw | | | 4 | 4 | M5 |
| K03 | HA700Q0030 | Holder | | | 2 | 2 | |
| K04 | H4922L8001 | Holder | | | 1 | 1 | |
| K05 | H3205J0662 | Ball bearing | | | 1 | 1 | |
| K06 | H007009300 | Retaining ring C-type | | | 1 | 1 | GB/T894.1 30 |
| K07 | HA700R0060 | Washer | | | 1 | 1 | |
| K08 | HA700R0050 | Support spring | | | 1 | 1 | |
| K09 | HA700R0040 | Spacer B | | | 1 | 1 | |
| K10 | H4928L8001 | Speed command disk F20 (up) | | | 1 | 1 | |
| K11 | HA700R0030 | Spacer A | | | 2 | 2 | |
| K12 | H4930L8001 | Speed command disk F11 (down) | | | 1 | 1 | |
| K13 | HA110D0672 | Screw | | | 2 | 2 | SM15/64 (28) ×12 |
| K14 | H4931L8001 | Pulley (complete) | | | 1 | 1 | |
| K15 | HA703R0067 | Washer | | | 1 | 1 | |
| K16 | HA703R0065 | Detector bracket (complete) | | | 1 | 1 | |
| K17 | HA3411D308 | Screw | | | 1 | 1 | SM15/64 (28) ×7 |
| K18 | H4936L8001 | Lever | | | 1 | 1 | |
| K19 | HA113F0684 | Screw | | | 1 | 1 | SM15/64 (28) ×7.5 |
| K20 | H4937L8001 | Screw | | | 1 | 1 | SM15/64 (28) ×6 |
| K21 | H4938L8001 | Rubber ring | | | 1 | 1 | |
| K22 | H4939L8001 | Spring | | | 1 | 1 | |
| K23 | H4940L8001 | Nut | | | 2 | 2 | |
| K24 | H4941L8001 | Screw | | | 2 | 2 | SM15/64 (28) ×14 |
| K25 | H4942L8001 | Nut | | | 1 | 1 | |
| K26 | H4943L8001 | Solenold (complete) | | | 1 | 1 | |
| K27 | H102080120 | Blot | | | 2 | 2 | GB/T5781 M8×12 |
| K28 | H4945L8001 | Set plate | | | 1 | 1 | |
| K29 | H005008060 | Spring washer | | | 2 | 2 | GB/T93 6 |
| K30 | H003002060 | Nut | | | 2 | 2 | GB/T6170 M6 |
| K31 | H4948L8001 | Link | | | 1 | 1 | |
| K32 | H4949L8001 | Blot | | | 1 | 1 | SM15/64 (28) ×13 |
| K33 | H4950L8001 | Arm | | | 1 | 1 | |
| K34 | HA300C2030 | Screw | | | 2 | 2 | SM11/64 (40) ×8 |

## L.ACCESSORIES

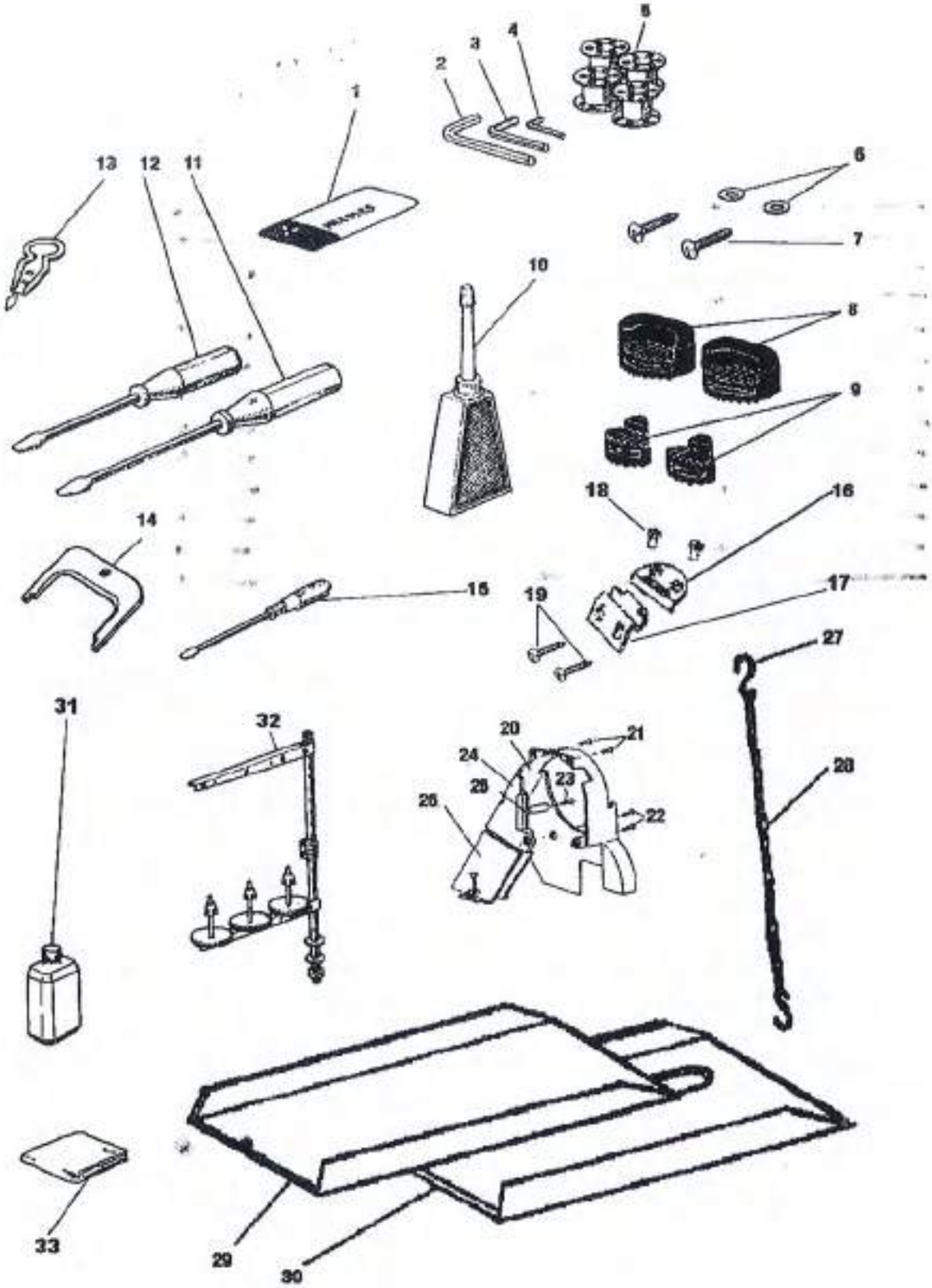

# L.ACCESSORIES

| Fig. No. | Part No. | Description | WF925-60 | WF926-60 | WF925-60/AUT | WF926-60/AUT | Remarks |
|---|---|---|---|---|---|---|---|
| L01 | H4740F8001 | Needle DP×17-23 | 3 | 6 | 3 | 6 | |
| L02 | H3209L8001 | Socket wrench | | | 1 | 1 | |
| L03 | H3208L8001 | Socket wrench | 1 | 1 | 1 | 1 | |
| L04 | H4905N8001 | Socket wrench | | | 1 | 1 | |
| L05 | H3306I0067 | Bobbin | 2 | 4 | | | |
| L05 | H4912I8001 | Bobbin | | | 2 | 4 | B0-B872（A） |
| L06 | H3200L0050 | Washer | 2 | 2 | 2 | 2 | |
| L07 | H801045200 | Screw | 4 | 4 | 4 | 4 | GB/T99 4.5×20 |
| L08 | H4700K0020 | Vibration preventing rubber | 2 | 2 | 2 | 2 | |
| L09 | H4700K0030 | Vibration preventing rubber | 2 | 2 | 2 | 2 | |
| L10 | HA100J2110 | Oiler | 1 | 1 | 1 | 1 | |
| L11 | HA100J2140 | Screw driver (middle) | 1 | 1 | 1 | 1 | |
| L12 | HA100J2150 | Screw driver (small) | 1 | 1 | 1 | 1 | |
| L13 | H3207L0065 | Thread a needle kit | 1 | 1 | 1 | 1 | |
| L14 | HA704S0654 | Adjusting plate for speed command disk | | | 1 | 1 | |
| L15 | HA300J2070 | Screw driver (large) | 1 | 1 | 1 | 1 | |
| L16 | H2404K0654 | Hinge complete | 2 | 2 | 2 | 2 | |
| L17 | H2404K0655 | Hinge complete | 2 | 2 | 2 | 2 | |
| L18 | H2404K0656 | Screw | 4 | 4 | 4 | 4 | |
| L19 | H802080350 | Screw | 4 | 4 | 4 | 4 | GB/T100 8×35 |
| L20 | H2008O0068 | Belt cover | | | 1 | 1 | |
| L21 | HA300C2170 | Screw | | | 2 | 2 | SM11/64（40）×8 |
| L22 | HA300J2280 | Screw | 2 | 2 | 2 | 2 | SM11/64（28）×8 |
| L23 | HA300J2250 | Screw | | | 1 | 1 | M4×8 |
| L24 | H2405B6601 | Belt cover complete | 1 | 1 | | | |
| L24 | H4708K7101 | Belt cover complete | | | 1 | 1 | |
| L25 | H003008040 | Nut | | | 1 | 1 | GB/T6172.1 M4 |
| L26 | HA305J0665 | Belt cover | 1 | 1 | 1 | 1 | |
| L27 | HPG100E202 | Pothook | 2 | 2 | 2 | 2 | |
| L28 | HPG100E203 | Chain | 1 | 1 | 1 | 1 | |
| L29 | H7013K8001 | Oil check | 1 | 1 | 1 | 1 | |
| L30 | H7014K8001 | Oil check | 1 | 1 | 1 | 1 | |
| L31 | H3200L0130 | Oil box | 1 | 1 | 1 | 1 | |
| L32 | HA300J2370 | Cotton stand | 1 | | 1 | | |
| L32 | H3200L0120 | Knee lift shaft | | 1 | | 1 | |
| L33 | H7009K8001 | Vinyl cover | 1 | 1 | 1 | 1 | |

## Gauge Parts List

| | | | | | | | |
|---|---|---|---|---|---|---|---|
| Gauge size | Needle plate | Presser Foot(inside) | Presser Foot(outside) | Needle clamp | Feed Dog | Slide plate (L) | Slide plate (R) |
| **WF926-60** | | | | | | | |
| 1/8(3.2mm) | H4737B8001 | H4741F8001 | H4758E8001 | H4750F8001 | H4745H8001 | H4732B8001 | H4733B8001 |
| 5/32(4mm) | H4738B8001 | H4742F8001 | H4759E8001 | H4751F8001 | H4746H8001 | H4732B8001 | H4733B8001 |
| 3/16(4.8mm) | H4739B8001 | H4743F8001 | H4760E8001 | H4752F8001 | H4747H8001 | H4732B8001 | H4733B8001 |
| 1/4(6.4mm) | H4734B8001 | H4737F8001 | H4757E8001 | H4739F8001 | H4744H8001 | H4732B8001 | H4733B8001 |
| 5/16(8mm) | H4740B8001 | H4744F8001 | H4761E8001 | H4753F8001 | H4748H8001 | H4746B8001 | H4733B8001 |
| 3/8(9.5mm) | H4741B8001 | H4745F8001 | H4762E8001 | H4754F8001 | H4749H8001 | H4746B8001 | H4733B8001 |
| 1/2(12.7mm) | H4742B8001 | H4746F8001 | H4763E8001 | H4755F8001 | H4750H8001 | H4747B8001 | H4750B8001 |
| 5/8(16mm) | H4743B8001 | H4747F8001 | H4764E8001 | H4756F8001 | H4751H8001 | H4747B8001 | H4750B8001 |
| 3/4(19mm) | H4744B8001 | H4748F8001 | H4765E8001 | H4757F8001 | H4752H8001 | H4748B8001 | H4750B8001 |
| 1(25.4mm) | H4745B8001 | H4749F8001 | H4766E8001 | H4758F8001 | H4753H8001 | H4749B8001 | H4750B8001 |
| **WF926-60/AUT** | | | | | | | |
| 1/8(3.2mm) | H4937B8001 | H4741F8001 | H4758E8001 | H4750F8001 | H4945H8001 | H4732B8001 | H4733B8001 |
| 5/32(4mm) | H4938B8001 | H4742F8001 | H4759E8001 | H4751F8001 | H4946H8001 | H4732B8001 | H4733B8001 |
| 3/16(4.8mm) | H4939B8001 | H4743F8001 | H4760E8001 | H4752F8001 | H4947H8001 | H4732B8001 | H4733B8001 |
| 1/4(6.4mm) | H4917B8001 | H4737F8001 | H4757E8001 | H4739F8001 | H4944H8001 | H4732B8001 | H4733B8001 |
| 5/16(8mm) | H4940B8001 | H4744F8001 | H4761E8001 | H4753F8001 | H4948H8001 | H4746B8001 | H4733B8001 |
| 3/8(9.5mm) | H4941B8001 | H4745F8001 | H4762E8001 | H4754F8001 | H4949H8001 | H4746B8001 | H4733B8001 |
| 1/2(12.7mm) | H4942B8001 | H4746F8001 | H4763E8001 | H4755F8001 | H4950H8001 | H4747B8001 | H4733B8001 |
| 5/8(16mm) | H4943B8001 | H4747F8001 | H4764E8001 | H4756F8001 | H4951H8001 | H4747B8001 | H4733B8001 |
| 3/4(19mm) | H4944B8001 | H4748F8001 | H4765E8001 | H4757F8001 | H4952H8001 | H4748B8001 | H4750B8001 |
| 1(25.4mm) | H4945B8001 | H4749F8001 | H4766E8001 | H4758F8001 | H4953H8001 | H4749B8001 | H4750B8001 |
| **WF925-60** | | | | | | | |
| | H7806B8001 | H4807F8001 | H3100G2110 | | H4807H8001 | H4812B8001 | H4813B8001 |
| **WF925-60/AUT** | | | | | | | |
| | H5014B8001 | H4807F8001 | H3100G2110 | | H5004H8001 | H4812B8001 | H4813B8001 |